IJNRD.ORG ISSN : 2456-4184
INTERNATIONAL JOURNAL OF NOVEL RESEARCH AND DEVELOPMENT (IJNRD) | IJNRD.ORG
An International Open Access, Peer-reviewed, Refereed Journal

DATA TRANSMISSION THROUGH LI-FI IN UNDERWATER

[1]Kurra Pallavi, [2]Dr. C. Padmaja

[1]M. Tech II(DECE), [2]Assistant Professor
[1]Dept. of Electronics and Communication,
[1]G Narayanamma Institute of Technology and Science, Hyderabad, India

Abstract: In the present scenario for various industrial, scientific and underwater applications high speed wireless communication is desirable. The existing underwater communication technique such as acoustic communication method has high latency and suffer low data rates, whereas RF frequency communication have high attention of signal underwater. The emerging optical wireless communication techniques have offered high data rates in Gbps and visible light promises low attenuation of signal strength which provides high data density. The proposed method deals with the transmission of data underwater through visible light communication. The proposed method designs data transmission model where it transmits text, audio, image through water. The hardware used in this model are Arduino Nano and the transmitter part in the model is the laser light, whereas the receiver part is made of laser receiver. The transmitter follows On Off Keying (OOK) modulation technique where the blinking of laser on determine1's and off as 0's in this way the data is transmitted via line of sight to the receiver underwater. Li-Fi implementation can be executed to achieve rapid information move. In future, the capacity can be increased as per the requirement to transmit high quality image audio using higher rage lasers and photodiodes.

IndexTerms - Arduino Nano, laser transmitter, laser receiver, OOK modulation, Li-Fi, visible light communication, underwater optical wireless communication.

I. INTRODUCTION

In the recent years where technology has been ruling the world with its high-speed internet services, optical wireless communication can play a crucial role in this sector. Optical wireless communication is capable of providing high data rates with low power and mass requirement and is used in various industrial, space and underwater communication applications. Underwater optical wireless links are less explored as it is more challenging where various physical parameters are to be considered for the data transmission as the underwater environments vary from shallow water bodies to deep oceans. The present technology using acoustic waves for underwater communication links has limited performance due to low bandwidth, high transmission losses, time varying multipath propagation, high latency and doppler spread. These factors lead to temporal and spatial variation of acoustic channel which in turn limits the available bandwidth of the system [1]. It can support data rate up to tens of kbps for long distances (ranging in kms) and up to hundreds of kbps for short distances (few meters). All this has led to the conception of underwater optical wireless communication (UOWC), as it provides higher data rates than the traditional acoustic communication systems with significantly lower power consumption and simpler computational complexities for short-range wireless links [2]. UOWC has different potential applications ranging from deep oceans to coastal waters.

Light Fidelity (Li-Fi) is the most reliable means of underwater communication for data transmission. This paper determines the better model for underwater data transmission. This model uses visible light source such as LEDs or laser are used as transmitter and photodiodes like LDR or laser receiver are used as a receiver. The visible light source used in this model is the laser transmitter module and laser receiver on the receiver part. The data to be transmitted is processed through Arduino into 1's and 0's and it follows On Off Keying (OOK) modulation [3]. The blinking of laser on determines 1's and off as 0's, in this way the data is transmitted via line of sight to the receiver underwater. Once the data is received is processed to get the information which can be a text, audio or image. This can be a feasible means of communication between the submarines, autonomous underwater vehicles (AUV) and unmanned underwater vehicles (UUV) as it provides high data rates in the range of Gbps.

II.LITERATURE SURVEY

In the recent years, optical wireless communication is being preferred for terrestrial communications, underwater communications for different applications in various fields due to its high-speed data transfer and low equipment requirement. Acoustic waves are widely used for the underwater communication links [4]. Though acoustic communication has improved over the years for better communication in underwater for long distances but it's relatively low data rates, highly varying multipath and propagation delay makes acoustic networks less reliable [5]. The Radio Frequency (RF) communication has high data rates in the terrestrial links. The RF communication in underwater is not preferable as the RF waves get absorbed in the water and the signal gets attenuated [6]. These

disadvantages paved a way for the optical wireless underwater communication which succeeds in high data rates, low signal attenuation and less equipment requirement [2]. The visible light is used for the communication in the optical wireless communication called as visible light communication. The visible light spectrum wavelength doesn't get absorbed in the water which is the major reason for low signal attenuation and high-speed data rate in the range of Gbps [3]. Generally, the LED or laser light are used for the visible light communication in the underwater on the transmission side and received by the photodiodes [7]. Since light is used for the communication link, it is called as Li-Fi technology. For longer range and to prevent scattering, laser light is best for the data transmission [8]. Laser light is highly directional, monochromatic and coherent and it doesn't scatter in the water travelling around 100m range. Hence laser light is highly preferable. The proposed technique uses laser transceiver for the communication link in the water [9].

III.SYSTEM DESIGN

The proposed underwater wireless communication system model uses laser transceiver for the communication and a microcontroller for the data processing. The below fig. 1 is the block diagram of the proposed underwater communication link.

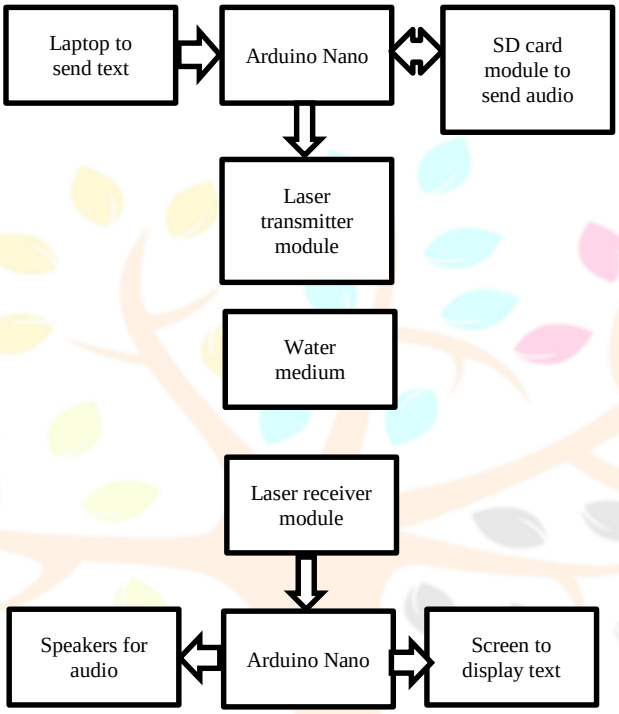

Fig. 1. Block Diagram of the proposed Underwater wireless communication model.

As stated in Fig. 1 the main blocks of the system are:

3.1 Arduino Nano

The microcontroller used in the proposed model is the Arduino Nano. The conversion of text or audio to bits is done here.

3.2 Laser Transmitter Module

It is a three-pin module consisting of VCC, OUT and GND. The wavelength of the laser module used is 650nm. The bits 1's is represented by high output i.e., on of the laser light and 0's as low, off of the laser light. In this way on off keying (OOK) modulation technique is implemented.

3.3 Laser Receiver Module

It is also a three-pin module consisting VCC, OUT and GND. It is non modulated receiver. The contact of the laser light on the photodiode represents high and no contact as low. In this way the bits are sent to the receiver microcontroller.

3.4 SD Card Module

The audio is stored in the SD Card. The SPI SD card module is interfaced with the Arduino Nano. The audio is sent to the Arduino through the Sd Card module.

3.5 Speakers

The AUX speakers are used for the audio output. The give the better audio output.

IV.WORKING

4.1 Text Transmission

The text transmission design flow is shown in the Fig. 2. The text is converted into bits and sent byte by byte in the transmitter Arduino Nano to the laser transmitter. The on off keying modulation is done at the laser transmitter where the bits are sent as on and off of the laser light for 1's and 0's respectively through the water medium.

The receiver depicts the contact of laser light as 1 and without contact as zero. The received 1's and 0's are read byte by byte and converted to characters in the receiver Arduino Nano.

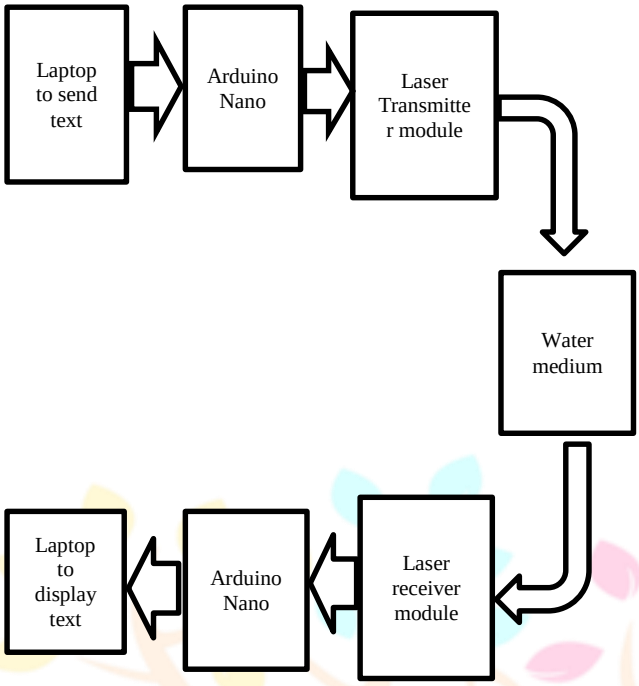

Fig. 2. Block diagram of Text Transmission.

4.2 Audio Transmission

The below Fig. 3 shows the design flow of the audio transmission.

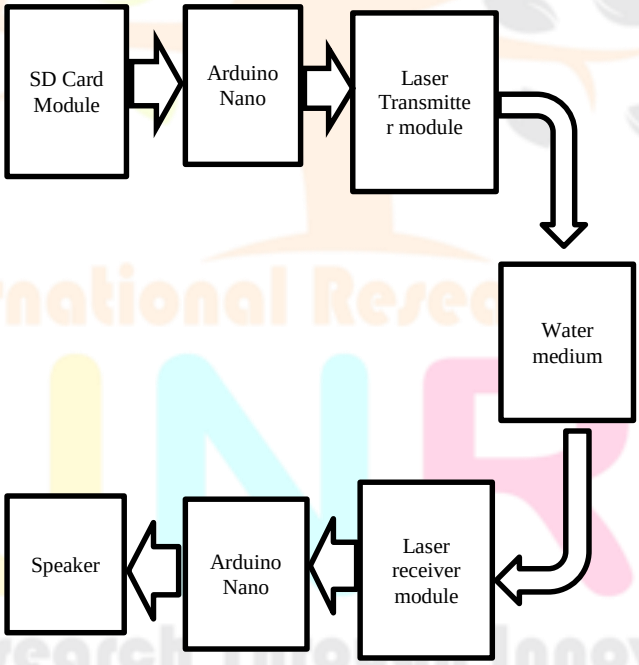

Fig. 3. Block diagram of Audio Transmission.

First the audio is converted to the .wav format using the online converter tool. The converted audio file is stored in the SD Card. The SPI SD Card module is interfaced to the Arduino Nano. This audio file converted to bits and are sent to the laser transmitter where the bits are sent serially. The receiver depicts the contact of laser light as 1 and without contact as zero. The Arduino Nano at the receiver process the received bits and get back the audio file. The output audio file is played through the speakers at the receiver.

V. RESULTS

The data transmission model using Li-Fi technology for underwater wireless optical communication is designed. The text and audio are transmitted as shown in Fig. 4.

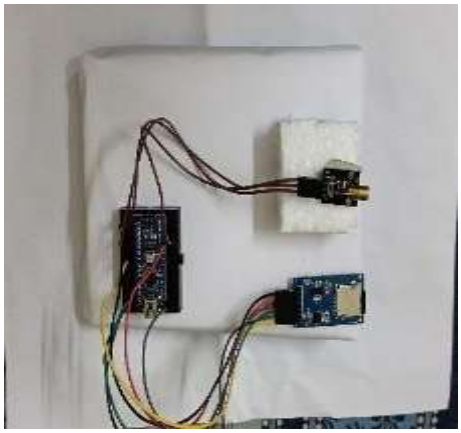

Fig. 4. Data Transmission Model.

The data transmitted is received on the laser receiver module and data is processed in the receiver Arduino Nano. The data receiver model for the underwater wireless data communication is shown in Fig. 5.

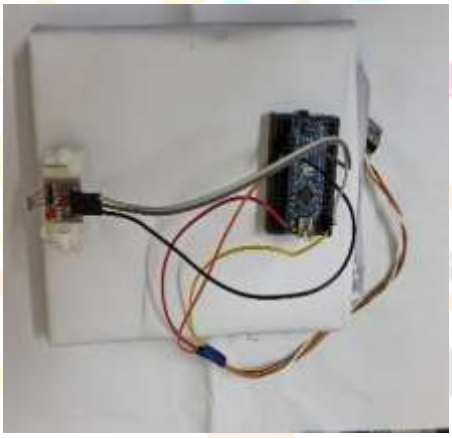

Fig. 5. Data Receiver Model.

The image of text received is displayed on the serial monitor screen of the receiver. The Fig. 6 depicts the output of the text received through the water medium.

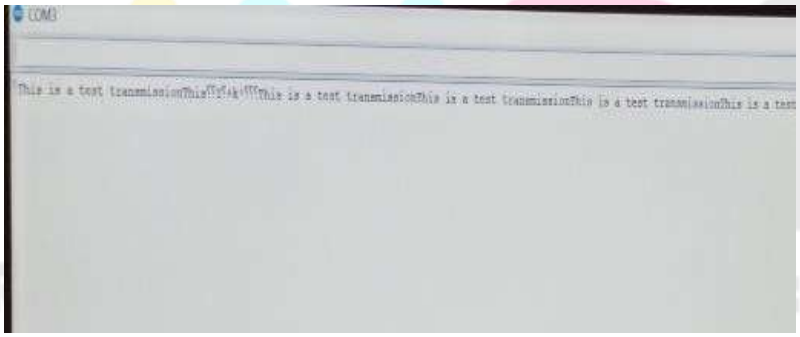

Fig. 6. Text received displayed on the screen.

VI. CONCLUSION AND FUTURE SCOPE

The underwater Li-FI data transmission and reception model using laser transceiver is designed, where data like text and audio are transmitted using visible light communication. This provides high data rates and high data density. This model can be used for speech transmission between divers in underwater, communication between two submarines etc.

Further the utilization of underwater wireless optical communication is being developed for various applications where it can be IoT based as described in the following:

- Providing information to fishermen about the various under water species available.
- Providing the information on the pollution levels in the water to the environmental organizations. Providing information to the naval bases of the anonymous AUV vehicle intrusions at the water borders. Further it can be developed for video transmission in underwaters.

REFERENCES

[1] D.B. Kilfoyle, A.B. Baggeroer, "The state of the art in underwater acoustic telemetry," *IEEE Journal of Oceanic Engineering* , vol. 25, no. 1, pp. 4 - 27, 2000.

[2] Hemani Kaushal, Georges Kaddoum, "Underwater Optical Wireless Communication," *IEEE Access*, vol. 4, pp. 1518 - 1547, 2016.

[3] Georgios N. Arvanitakis, et al., "Gb/s Underwater Wireless Optical Communications Using Series-Connected GaN Micro-LED Arrays," *IEEE Photonics Journal* , vol. 12, no. 2, 2020.

[4] J. R. Apel, Principles of Ocean Physics, Academic Press, 1987.

[5] E M Sozer, M Stojanovic, J G Proakis, "Underwater acoustic networks," *IEEE Journal of Oceanic Engineering*, pp. 72-83, 2000.

[6] A.I. Al-Shamma'a, A. Shaw, S. Saman, "Propagation of electromagnetic waves at MHz frequencies through seawater," *IEEE Transactions on Antennas and Propagation*, vol. 52, no. 11, pp. 2843 - 2849, 2004

[7] Chunxiao Han, Xiaozhou Sun, Shigang Cui, "Design of 100Mbps white light LED based visible light communication system," in 2017 4th International Conference on Systems and Informatics (ICSAI), Hangzhou, China, 2017.

[8] C. Shen, "Laser-based high bit-rate visible light communications and underwater optical wireless network," in 2020 Photonics North (PN), Niagara Falls, Canada, 2020.

[9] Syed Agha Hassnain Mohsan, Abid Hussain, Nawaf Qasem Hamood Othman, Hussain Amjad, "Investigation and Design of Laser Diode based Diver-to-Diver Optical Communication System," in 2020 IE2020 IEEE MTT-S International Conference on Numerical Electromagnetic and Multiphysics Modeling and Optimization (NEMO), Hangzhou, China, 2020.