IJNRD.ORG ISSN : 2456-4184
INTERNATIONAL JOURNAL OF NOVEL RESEARCH AND DEVELOPMENT (IJNRD) | IJNRD.ORG
An International Open Access, Peer-reviewed, Refereed Journal

LoRaWAN based IoT system for fire detection

S. Vijay[1], G. Tharnish[2], R. Sadiq Basha[3], N. Sakker Mohamed[4]
Department of Electrical and Electronics Engineering,
Dr. M.G.R Educational and Research Institute

ABSTRACT: Fire detection has been a difficulty of interest to researchers because of because of harm to lives and property among a really short time. One amongst the recent solutions developed to notice is to use Heat detectors equipped with certain degree of values. Heat detector is a sensor which detects temperature change or humidity. With the help of IoT (Internet of things) we can send messages to the designated authority whenever a fire accident occurs with the heat detector. Smoke and heat from fires can dissipate too rapidly or accumulate too slowly for effective detection. In contrast, because flame detectors are optical devices, they can respond to flames in less than a second. This optical quality also limits the flame detector as not all fires have a flame. As with any type of detection method its use must match the environment and the risk within the environment.

Keywords: Fire detection, heat detectors, IoT implementation, Safety, IoT devices.

INTRODUCTION

Fire detection is an attractive topic for researchers, due its significant damage to lives and property within a very short time. Also, fired election systems are of an utmost importance to alert occupants about the threat, because such systems have a crucial role for safe life and environment, and it has a great impact on human being, organisms, environment, and ecosystem. For that reason, many studies have been conducted to find the best strategies for fire detection using different techniques for indoor and outdoor areas. Traditional methods for fire detection rely on sensors that require close proximity for activation, such as infrared and optical sensors. For example, the authors proposed a prototype for fire monitoring in rural environments. It collects data from sever a long-range (LoRa) nodes of sensors that measure temperature, relative humidity, wind speed and CO2 of the environment. These data are collected using Arduino board to be sent and analyzed by The Things Network (TTN) server. Conventional sensors data, like temperature and gas measurement at the moment a fire starts, was collected to be processed using Arduino board. The main problem with the traditional methods does not give information about the size and precise location of the fire. Therefore, to reduce these defects we added GPS to pinpoint the exact location.

A flame detector is a sensor designed to detect and respond to the presence of a flame or fire, allowing flame detection.

Responses to a detected flame depend on the installation, but can include sounding an alarm, deactivating a fuel line (such as a propane or a natural gas line), and activating a fire suppression system. When used in applications such as industrial furnaces, their role is to provide confirmation that the furnace is working properly; it can be used to turn off the ignition system though in many cases they take no direct action beyond notifying the operator or control system. A flame detector can often respond faster and more accurately than a smoke or heat detector due to the mechanisms it uses to detect the flame.

The detector is sensitive to a narrow band of radiation around the 4.4-micron range which is a predominant emission band for hydrocarbon fueled fires. Additionally, the sun's radiation at this band is absorbed by the earth's atmosphere, making the IR flame detector solar blind. Single frequency detectors use a pyroelectric sensor, which responds to changes in IR radiation intensity. In addition, they incorporate a low frequency band pass filter, which limits their response to those frequencies that are characteristic of a flickering fire. In response to a fire signal from the sensor, electronic circuitry in the detector generates an output signal.

WORKING

The fire detector detects temperature and/or heat for the given amount of programmed value . In the event of a fire, these devices will react to smoke or extremely high temperatures. After activation, the device will send a signal to the alarm system to perform a programmed response to the area.

Power supply is required to operate the sensor and the microcontroller. A transformer is used to convert 12v DC to 5V AC.

The microcontroller is used to program the desired heat threshold that need to be sensed by the sensor. It manages the input and output devices.

A GPS is used to detect the exact location of the event occurred using the latitude and longitude scales.

When the heat is detected, a LED will glow and a message will be sent using the IoT to the respected authority by pinpointing the exact location.

BLOCK DIAGRAM

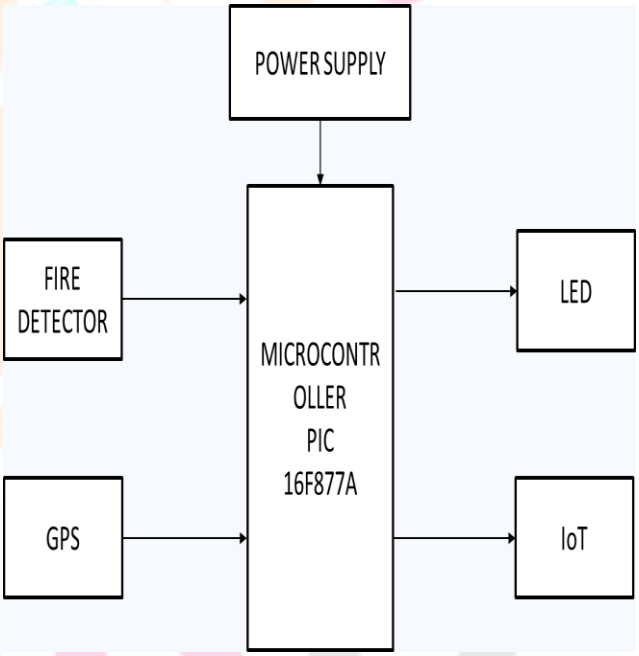

HARDWARE SETUP

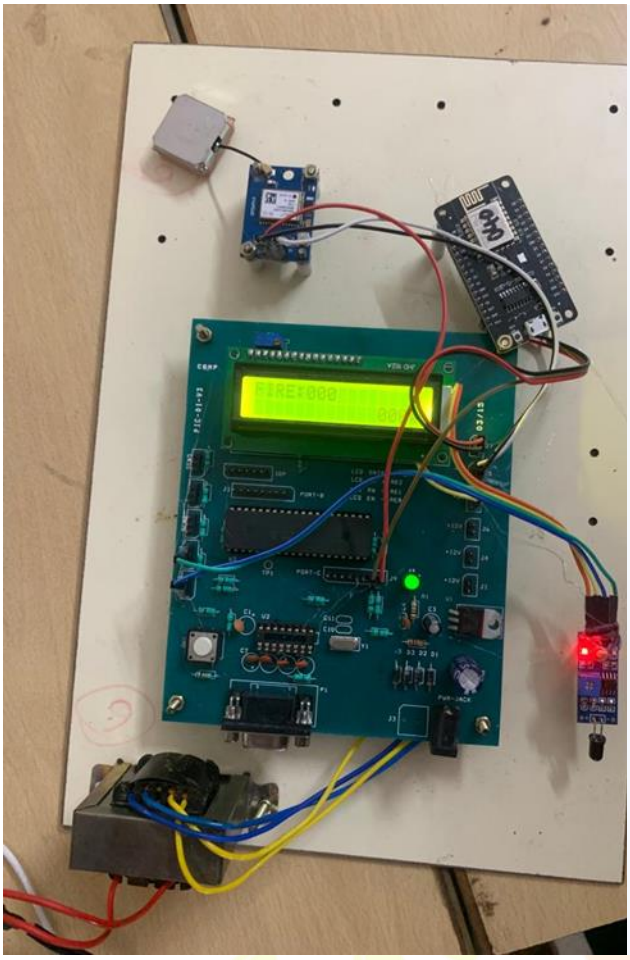

COMPONENTS

PIC microcontroller:

PIC microcontrollers (Programmable Interface Controllers), are electronic circuits that can be programmed to carry out a vast range of tasks. They can be programmed to be timers or to control a production line and much more. They are found in most electronic devices such as alarm systems, computer control systems, phones, in fact almost any electronic device. Many types of PIC microcontrollers exist, although the best is probably found in the GENIE range of programmable microcontrollers.

The PIC architecture consists of two memories: Program memory and Data memory.

Program Memory: This is a 4K*14 memory space. It is used to store 13-bit instructions or the program code. The program memory data is accessed by the program counter register that holds the address of the program memory. The address 0000H is used as reset memory space and 0004H is used as interrupt memory space.

Data Memory: The data memory consists of the 368 bytes of RAM and 256 bytes of EEPROM. The 368 bytes of RAM consists of multiple banks. Each bank consists of general-purpose registers and special function registers.

The special function registers consist of control registers to control different operations of the chip resources like Timers, Analog to Digital Converters, Serial ports, I/O ports, etc.

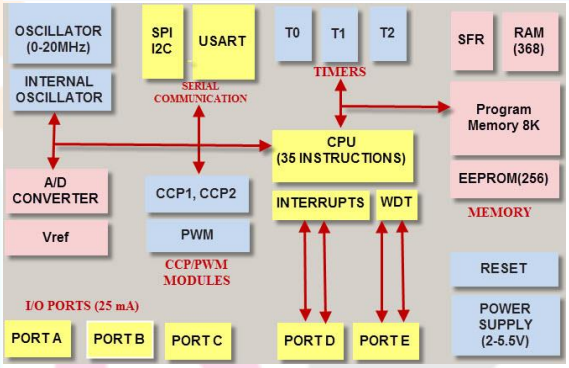

Flame sensor:

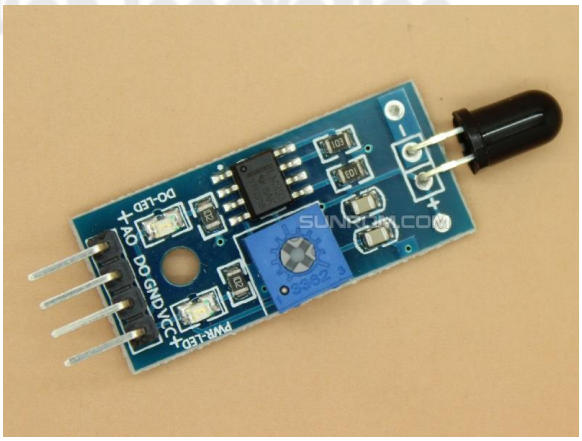

Specifications

- Operating Voltage: 3.3V to 5V DC
- Operating Current: 15ma
- Output Digital - 0V to 5V, Adjustable trigger level from preset
- Output Analog - 0V to 5V based on infrared radiation from fire flame falling on the sensor
- LEDs indicating output and power
- PCB Size: 3.2cm x 1.4cm
- LM393 based design

Pin details

- VCC = 3.3V to 5V DC
- GND = Ground
- DO = Digital Output
- AO = Analog Output

GPS:

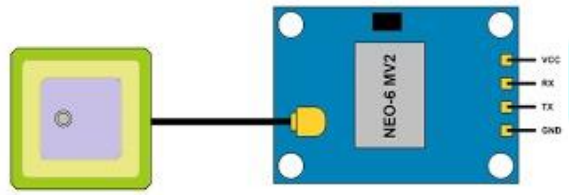

The NEO-6MV2 is a GPS (Global Positioning System) module and is used for navigation. The module simply checks its location on earth and provides output data which is longitude and latitude of its position. It is from a family of stand-alone GPS receivers featuring the high-performance u-blox 6 positioning engines. These flexible and cost-effective receivers offer numerous connectivity options in a miniature (16 x 12.2 x 2.4 mm) package. The compact architecture, power and memory options make NEO-6 modules ideal for battery operated mobile devices with very strict cost and space constraints. Its Innovative design gives NEO-6MV2 excellent navigation performance even in the most challenging environments.

The module has four output pins and we will describe the function each pin of them below. The powering of module and communication interface is done through these four pins.

Pin Name	Description
VCC	Positive power pin
RX	UART receive pin
TX	UART transmit pin
GND	Ground

ESP8266:

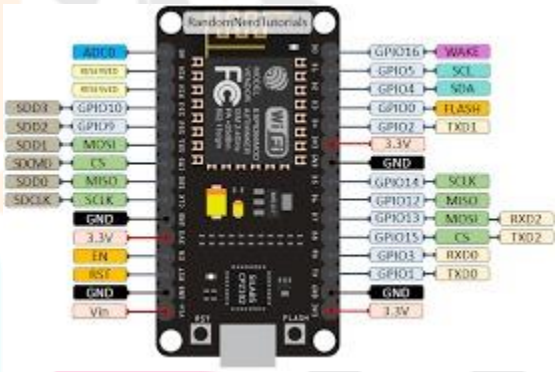

ESP8266 specifically for mobile devices, wearable electronics and networking applications design and make the machine to achieve the lowest energy consumption, together with several other patented technology. This energy-efficient construction in three modes: active mode, sleep mode and deep sleep mode type.

ESP8266 automatic wake-up in the shortest time, this feature can be applied to the SOC for mobile devices, so before you turn Wi- Fi SOC are in a low-power standby mode. To meet the power requirements of mobile

devices and wearable electronics products, ESP8266 at close range when the PA output power can be reduced through software programming to reduce overall power consumption in order to adapt to different applications.

RESULT

Whenever a flame or fire is detected, the flame detector sends the signal to the microcontroller with the exact location of the incident with the help of GPS system.

We will get a message to our cloud website with the help of IoT module, which gives the information about the incident and location through latitude and longitude values.

CONCLUSION

Recent trend in the development of fire detection systems makes use of IoT devices often equipped with simple detection algorithms, having compromised accuracy and false alarm rate, to allow their real-time implementation over such resource-limited platforms. In this work, we proposed a privacy-preserving fire detection algorithm executable at the cloud. In this approach, an flame detector detects the flame physically, and then send these features to the cloud for further processing to detect fire and possibly send warning messages to intended users. In this paper, we explained about all our ideas to implement IoT with fire detection which makes the manual labors less. We can also connect a fire extinguisher to act exactly at the time of fire, but we can't implement those with our limited budget. In future we will add more features and make it more innovative.

REFERENCES

[1] K. Muhammad, J. Ahmad, Z. Lv, P. Bellavista, P. Yang, and S. W. Baik, ''EfficientdeepCNN-basedfiredetectionandlocalizationinvideosurveillance applications,'' IEEE Trans. Syst., Man, Cybern. Syst., vol. 49, no. 7, pp. 1419–1434, Jul. 2019.

[2] K. Muhammad, S. Khan, M. Elhoseny, S. Hassan Ahmed, and S. Wook Baik, ''Efficient fire detection for uncertain surveillance environment,'' IEEE Trans. Ind. Informat., vol. 15, no. 5, pp. 3113–3122, May 2019.

[3] S. Sendra, L. García, J. Lloret, I. Bosch, and R. Vega-Rodríguez, ''LoRaWANnetworkforfiremonitoringinrural

environments,''Electronics, vol. 9, no. 3, p. 531, Mar. 2020.

[4] G. Roque and V. S. Padilla, ''LPWAN based IoT surveillance system for outdoor fire detection,'' IEEE Access, vol. 8, pp. 114900–114909, 2020.

[5] P. S. Raju, M. Mahalingam, and R. A. Rajendran, ''Review of intellectual videosurveillancethroughInternetofThings,'' inTheCognitiveApproach in Cloud Computing and Internet of Things Technologies for Surveillance Tracking Systems. New York, NY, USA: Academic, 2020, pp. 141–155.

[6] A.Sharma,P.K.Singh,andY.Kumar,''Anintegratedfiredetectionsystem usingIoTandimageprocessingtechniquefors martcities,''Sustain.Cities Soc., vol. 61, Oct. 2020, Art. no. 102332.

[7] P. Dasari, G. K. J. Reddy, and A. Gudipalli, ''Forest fire detection using wireless sensor networks,'' Int. J. Smart Sens. Intell. Syst., vol. 13, no. 1, pp. 1–8, 2020.

[8] P. Foggia, A. Saggese, and M. Vento, ''Real-time fire detection for videosurveillance applications using a combination of experts based on color, shape, and motion,'' IEEE Trans. Circuits Syst. Video Technol., vol. 25, no. 9, pp. 1545–1556, Sep. 2015.

[9] S.Li,Q.Yan,andP.Liu,''Anefficientfiredetectionmethodbasedonmultiscale feature extraction, implicit deep supervision and channel attention mechanism,'' IEEE Trans. Image Process., vol. 29, pp. 8467–8475, 2020.

[10] S. Wu, C. Guo, and J. Yang, ''Using PCAand one-stage detectors for real-time forest fire detection,'' J. Eng., vol. 2020, no. 13, pp. 383–387, Jul. 2020.

[11] J. Redmon and A. Farhadi, ''YOLOv3: An incremental improvement,'' 2018, arXiv:1804.02767. [Online]. Available: http://arxiv.org/abs/ 1804.02767

[12] W. Liu, D. Anguelov, D. Erhan, C. Szegedy, S. Reed, C. Y. Fu, and A. C. Berg, ''SSD: Single shot multibox detector,'' in Proc. Eur. Conf. Comput. Vis., 2016, pp. 21–37.

[13] Y. Lee and J. Shim, ''False positive decremented research for fire and smokedetectioninsurveillancecamerausingspatialandtemporalfeatures based on deep learning,'' Electronics, vol. 8, no. 10, p. 1167, Oct. 2019.

[14] T. Wang, L. Bu, Z. Yang, P. Yuan, and J. Ouyang, ''A new fire detection method using a multi-expert system based on color dispersion, similarity and centroid motion in indoor environment,'' IEEE/CAA J. Automatica Sinica, vol. 7, no. 1, pp. 263–275, Jan. 2020.

[15] X. Huang and L. Du, ''Fire detection and recognition optimization based on virtual reality video image,'' IEEE Access, vol. 8, pp. 77951–77961, 2020.

[16] A. Al-Kaff, Á. Madridano, S. Campos, F. García, D. Martín, and A. de la Escalera, ''Emergency support unmanned aerial vehicle for forest fire surveillance,'' Electronics, vol. 9, no. 2, p. 260, Feb. 2020.

[17]F.BuandM.S.Gharajeh,''Intelligentandvision-basedfiredetectionsystems:Asurvey,''Image Vis.Comput.,vol.91,Nov.2019,Art. no. 103803.

[18] C.Leng,H.Zhang,B.Li,G.Cai,Z.Pei,andL.He,''Localfeaturedescriptor for image matching: A survey,'' IEEE Access, vol. 7, pp. 6424–6434, 2019.

[19] J. Ma, X. Jiang, A. Fan, J. Jiang, and J. Yan, ‘‘Image matching from handcrafted to deep features: A survey,’’ Int. J. Comput. Vis., pp. 1–57, 2020.

[20] S. Krig, Computer Vision Metrics. Cham, Switzerland: Springer, 2016.

[21] A. Mathur and G. M. Foody, ‘‘Multiclass and binary SVM classification: Implications for training and classification users,’’ IEEE Geosci. Remote Sens. Lett., vol. 5, no. 2, pp. 241–245, Apr. 2008.

[22] H.A.V.Spang,‘‘Objecttrackingusinglocalbinarydescriptor,’’M.S.thesis, Sci. Comput. Eng., Kate Gleason College Eng., Rochester, NY, USA, 2015.

[23] N.DalalandB.Triggs,‘‘Histogramsoforientedgradientsforhumandetection,’’ in Proc. IEEE Comput. Soc. Conf. Comput. Vis. Pattern Recognit. (CVPR), Jun. 2005, pp. 886–893.

[24] W. Rawat and Z. Wang, ‘‘Deep convolutional neural networks for image classification: A comprehensive review,’’ Neural Comput., vol. 29, no. 9, pp. 2352–2449, Sep. 2017.

[25] Y.HoandS.Wookey,‘‘Thereal-world-weightcross-entropylossfunction: Modeling the costs of mislabeling,’’ IEEE Access, vol. 8, pp. 4806–4813, 2020.

[26] C. Emmy Prema, S. S. Vinsley, and S. Suresh, ‘‘Efficient flame detection based on static and dynamic texture analysis in forest fire detection,’’ Fire Technol., vol. 54, no. 1, pp. 255–288, Jan. 2018.

[27] K. Muhammad, J. Ahmad, I. Mehmood, S. Rho, and S. W. Baik, ‘‘Convolutionalneuralnetworksbasedfiredetectioninsurveillancevideos,’’IEEE Access, vol. 6, pp. 18174–18183, 2018.

[28] R. Pi. (2019). Raspberry PI 4 Model B. [online]. [Online]. Available: https://www.raspberrypi.org/products/raspberry-pi-4-model-b/, 2019.