IJNRD.ORG ISSN : 2456-4184
INTERNATIONAL JOURNAL OF NOVEL RESEARCH AND DEVELOPMENT (IJNRD) | IJNRD.ORG
An International Open Access, Peer-reviewed, Refereed Journal

Design and Development of Laser Engraver

Deepak Paliwal[1], Anirudh Nair[2], Bhavesh Sompura[3], Mahendra Singh[4], Ishwar Singh[5] and Jai Vardhan[6]
[1,2,3,4,5,6]*Geetanjali Institute of Technical Studies, Udaipur*

***Abstract*—In present scenario, application of laser is increasing in various sectors due to its versatile flexibility and cost-effectiveness. This paper presents a simple design and development procedure of laser engraving machines. The application of machine on different materials has been discussed for the purpose of engraving where a specific depth of removed part has been investigated. Importance of various parameters have been shown to remove the specific depth of removed material. Components used in laser engraver, its functioning and working have been discussed. Apart from the parameter prospective, material properties have also been always an important parameter. Advantages of integration laser technology and CNC technology has been highlighted to produce cost and time effective machining operations.**

***Index Terms*—Laser, Engraving Machines, CNC Machines.**

I. INTRODUCTION

Development in low cost Computer Numeric Control Machine (CNC) has gained the attention of many researchers. Still high quality professionalism is required in the area of computer controlled operations. An artificial source of light which obtains by amplification through activation of elements of a physical medium is a laser.

Laser technology is versatile in nature and offering its application on a wide range of materials for various purposes like drilling, ablation and most importantly engraving.

In present time, laser technology has brought wide range of benefits in many fields of tool manufacturing. Laser engraving machine utilising laser as a source or tool for performing the task which can be controlled by various input parameters such as output power, wavelength and frequency of laser emitting out from the nozzle, speed and depth of cut during the operation etc. It is quite obvious that the output parameter like surface roughness depends on the input parameters set to the machine. Computer controlled laser requires no skilled craftsmanship and complete the given task in a short time to engrave large number of pieces on different type of materials. Due to its advantages of performing task in less time on different materials, laser engraving can be done for various purposes such as micromachining, graphics design, printing The engraving process importance came from it wide application such as Printing, Micromachining, vase marking, graphic design, engraving on Jewelry etc.

During the operation of laser engraver, beam of laser is oriented to maintain required slenderness and acquire high processing speed along with the generation of smooth cutting surface. Therefore, laser cutting technology has been offering a lot many applications in today's mechanical based industries.

Considering many advantages and applications of laser, a working model has been presented in the paper which utilizes laser in a mechanical system controlled by computer. The purpose of this working model is to perform automatic engraving which can be used in Industries. The machine is compact in nature, therefore, can be moved anywhere at the place of operation to perform the task. This machine is being utilized to produce designs on wooden blocks.

II. LITERATURE REVIEW

History of engraver started from 1875 where the application was limited to writing purpose only. Technology of amplification by simulated emission of radiation was identified by researchers even before that. Gordon et al., (1954) produced microwave amplification by simulated emission of radiation. Later on in 1960, light amplification by simulated emission of radiation was derived. In the same years, computer numerical (CNC) were involved as direct numerical control. It took almost 26 years, when industrial application of laser technology was widespread accepted, Siegman & Anthony (1986) [1].

The requirements of CNC machine tool design and development raised with the time and leaser technology was clubbed with CNC technology. Since then many investigations have been carries out.

These advancements of integrating technologies dropped the price of laser making systems and in the 1990s and onward more practical investment and developments were made in the area of laser engraving.

Investigation on wood engraving was done by C.Leone et al (2009) [2] with the aim of investigating the influence of the process parameters on the material removal rate considering different types of woods.

An experimental study of laser engraving was done by J. Qi et al (2003) [3] on stainless. The influence of laser beam on the mark depth and width on steel was investigated.

F. Agalianos et al (2011) [4] have investigated industrial application of laser engraving and showed the influence of the process parameters on machined surface quality. Machining quality was addressed in the study when the laser engraver removed material of stainless steel in layer by layer fashion with the thickness of few microns. The examined parameters were pulse frequency, beam speed and layer thickness. Sefika Kasman (2013) [5] investigated taguchi orthogonal analysis for laser engraving. This study has included machining of complex and hard material.

Literature has indicated that engraving of all types of material is possible by changing the input parameters such as frequency, wavelength, laser power etc. Same is depicted by Dharmesh K. Patel et al [6]. Parametric Optimization of Laser engraving has been done.

III. METHODOLODY OF LASER ENGRAVER

For the input supply of laser engraver, current in Arduino V3 with the help of USB data cable need to be transferred into the Mother Board. Stepper Drivers provide further movements in the form of G codes. The Arduino locates on a CNC shield. The CNC shield distributes the current in the form of commands to Arduino. The work of a CNC shield is to convert the commands of G codes into digital pulses by stepper motors.

The movement is divided into three axis i.e. X , Y and Z axis respectively. Firstly the X direction stepper motor will move in Left and Right and similarly Y direction stepper motor will move in front and back directions and at last the Z direction stepper motor will be moving in up and Down direction. Laser will be mounted on the Z axis and will penetrate on the surface according to commands received for Engraving.

The accuracy of this machine is very high as compared to other traditional machines. It has been tried to make some difficult designs with help of proposed Laser Engraver. The advantage of CNC Laser Engraver is that it engraves complex sketches in very less time.

The coordinates were uploaded to the controller from a separate program. The image file is transformed into a G code via an open source software which is ENGRAVER MASTER in our case. Then further the code is transferred to the microcontroller by which motor mechanism is instructed to engrave the required image.

Figure 1: Overall layout of Laser Engraver

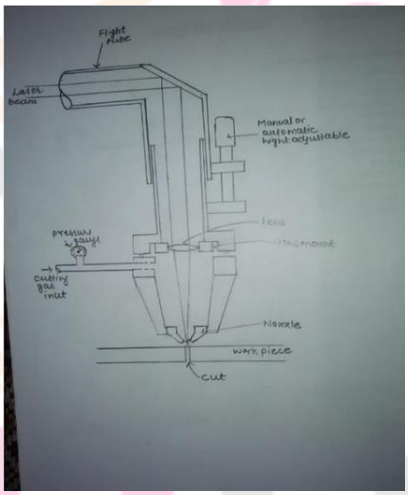

Figure 2: Sketch of main Unit

The sketch here is of the main unit of the system; it depicts the attachment where the laser nozzle is placed. The laser nozzle consists of a laser device which is mounted to a moveable attachment which in term is connected to a servo motor which provides movement to the laser nozzle. The laser used here is an optical laser which provides enough heat to melt paper and plastic on which we are going to perform cutting and engraving operations. It is fitted with an adjustment screw which helps in height adjustment. The most important component is the lens inside the laser gun.

The laser beam is condensed by machining lens and while the laser beam thus condensed is being applied to a work piece the laser beam and workpiece are

moved relative to each other to cut the work piece. The work piece is fixed on the movable platform with the help of fasteners or magnets. The movement is achieved from a stepper motor attached to it which in turn is controlled by pulsed input from arduino and easy motor drive. The input to the arduino is given from a DPDT switch which is used by the user to get the desired movement of the work bench or platform. The platform can move in "Y" axis only. The laser diode is mounted in a laser housing to prevent it from overheating and from focusing the beam. Laser diode along with the laser housing is mounted onto the vertical stand which provides movement in the "X" axis with help on the stepper motor. Here also the movement is controlled by the same as explained above. The code burnt in the arduino is basic which involves producing high output when the DPDT switch is pressed and the rpm is set once along with the rotation angle. The power is provided from two different power sources, one being of 3 Volts and other being of 12Volts. The 5V power supply is used to provide supply to laser diodes which utilizes a maximum of 3v in forward bias condition. The 12v power is consumed by a 2 stepper motor which is used in movement of laser and platform.

III. MAIN COMPONENTS OF LASER ENGRAVER

(i) Stepper motor

A stepper motor is a brushless DC electric motor that divides a full rotation into a number of equal steps. The motor's position can then be commanded to move and hold at one of these steps without any feedback sensor (an open-loop controller).

DC brushed motors rotate continuously when DC voltage is applied to their terminals. The stepper motor is known by its important property to convert a train of input pulses (typically square wave pulses) into a precisely defined increment in the shaft position. Each pulse moves the shaft through a fixed angle. Stepper motors effectively have multiple "toothed" electromagnets arranged around a central gear-shaped piece of iron. The electromagnets are energized by an external control circuit, such as a microcontroller. To make the motor shaft turn, first, one electromagnet is given power, which magnetically attracts the gear's teeth. When the gear's teeth are aligned to the first electromagnet, they are slightly offset from the next electromagnet. This means that when the next electromagnet is turned on and the first is turned off, the gear rotates slightly to align with the next one. From there the process is repeated. Each of those rotations is called a "step", with an integer number of steps making a full rotation. In that way, the motor can be turned by a precise angle.

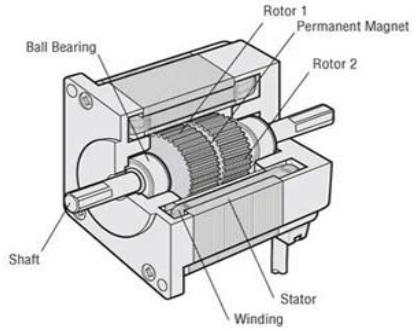

Motor Structural Diagram: Cross-Section Parallel to Shaft

(ii) Arduino

Arduino is an open-source computer hardware and software company, project and user community that designs and manufactures kits for building digital devices and interactive objects that can sense and control the physical world. Arduino boards may be purchased pre assembled, or as do-it-yourself kits; at the same time.

Arduino programs are written in C or C++. The Arduino IDE comes with a software library called "Wiring" from the original Wiring project, which makes many common input/output operations much easier. Users only need to define two functions to make an executable cyclic executive program.

(iii) 3D Printer firmware

3D Printer firmware settings Connection to the printer motherboard is important. This should allow the output to two free pins that can be controlled. The laser driver is connected to these pins. It is also necessary to adjust the control firmware so that when the G-Code is recorded that contains the command to run the laser, the 3D printer transmits the signal to the driver. The majority of home-built printers and even some delivered by manufacturers allow you to modify the firmware.

(iv) Power supply for laser diode

The output was then taken out with help of two soldered wires and directly fed to the laser diode passing through a control switch.

(v) Power supply for stepper motors

It is a DC power output device which converts AC current. The output can be regulated as desired by the user. A rectifier circuit converts AC input into varying DC output which in turn is passed through an electronic filter to convert it into unregulated DC voltage. We need a power supply of 12 volts for our two stepper motor. The voltage output can be changed by regulating the knob.

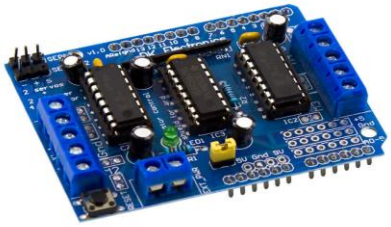

(vi) Motor driver I.C

L293D is a dual H-bridge motor driver IC which allows DC motors to drive in either direction. Motor drivers act as current amplifiers since they take a low-current control signal and provide a higher-current signal. Enable pins 1 and 9must be high for motors to start operating. When an enable input is high, the associated driver gets enabled.

(vii) DPDT switch

DPDT stands for double pole double throw relay. Relay is an electromagnetic device used to separate two circuits electrically and connect them magnetically. They are often used to interface an electronic circuit, which works at low voltage to an electrical circuit which works at high voltage. There are two sections in the DPDT switch which are input and output. The input section consists of a coil with two pins which are connected to the ground and input signals. The output section consists of contractors which connect or disconnect mechanically.

IV. RESULT OUTCOMES

The concept has been converted into reality along with all its components. Working prototype was made with help of different components acquired and purchased. It was found that that the laser beam can be used for few cuts and as it burn out after prolong use. Therefore, feed rate is very crucial during machining. Further, connection as diode works only in forward bias condition and under a particular range of voltage. The platform here can accommodate only small objects which can be kept in pocket. The size of platform or bed can be increased for bigger projects in future. The basic aim was to build a scale down model of industrial laser cutter. It involved the extensive role of Arduino programming and c codes. The developed Laser Engraver works well on Plywood, plastic and paper.

REFERENCES

[1] Siegman and Anthony (1986), laser, University Science Books Sausalito, California: The Maple-Vail Book Manufacturing Group.

[2] C. leone, V. lopresto, I. De Iorio "Wood engraving by Q – Switched Diode – pumped frequency – doubled Nd : YAG green laser" optics and Laser in Engineering, vol-47, pp: 161-168,2009.

[3]J. Qi, K. L. Wang, Y. M. Zhu, "Investigation of a study on the laser marking process of stainless steel using a Q- switched Nd: YAG laser was used in this process".

[4] F.Agalianos, S.Patelis, P. Kyratsis, E. Maravelakis, E.Vasarmidis, A.Antoniadis, "Industrial Applications of Laser Engraving: Influence of the Process Parameters on Machined Surface Quality", World Academy of Science, Engineering and Technology 59 (2011) 1242-1245.

[5] Sefika Kasman," Impact of parameters on the process response: A Taguchi orthogonal analysis for laser engraving", Dokuz Eylul University, Izmir Vocational School, Buca, and Izmir, Turkey, Measurement 46 (2013) 2577–2584.

[6] Dharmesh K. Patel , Dr. Dhaval.M.Patel, "Parametric Optimization of Laser Engraving Process for different Material using Grey Relational Technique-A Review", Patel et al., 3(4): April, 2014.