IJNRD.ORG ISSN : 2456-4184
INTERNATIONAL JOURNAL OF NOVEL RESEARCH AND DEVELOPMENT (IJNRD) | IJNRD.ORG
An International Open Access, Peer-reviewed, Refereed Journal

Pre-Taste: Food Spoilage Detection System

Milind Manohar Patwardhan, Anshuman Abhimanyu Giramkar, Akshata Surendra Gile, Giriraj Sanjay Bedke, Gayatri Ganpatrao Gite, Parth Prashant Gite

Vishwakarma Institute of Technology, Pune, 411037, Maharashtra, India

***Abstract* — Food is an essential source of energy and nutrition for the growth of all living beings. It is one of the most important aspects for life survival on our planet before clothes, and shelter. Due to the rapid growth of technology over thousands of decades, the Internet has become one of those aspects of life because it is an essential source of information globally. Food spoilage is a disturbing menace to our lifestyle, nutrition, and energy intake. This project report is in regard to the food spoilage detection systems using electronic components like MQ3 sensors, LCD, and its interfacing with NodeMCU which has an ESP8266 microcontroller mounted on it. Along with, LCD, the sensor-monitored data will also be shared with a cloud server which can be accessed on a mobile phone via the Internet. Communication and automation concepts like IoT and I2C communication protocols are implied in this work.**

***Keywords* — Internet of Things, ESP8266, I2C, MQ3 sensor, 16X2 LCD display**

Food is one of the basic needs of survival. The main source of energy for living beings but at the same time, the food consumed needs to be hygienic. Along with the nutrient capacity of the food the safety while consumption also has raised concerns. Thus, to ease life we have evolved technology till date and today to solve the problem of wastage of food due to food spoilage. According to the statics, studies have shown 1.3 billion tons of food wastage every year and more than half of it is lost due to spoilage. There have been systems to date to keep control of environmental factors such as that Refrigeration, vacuum storage, etc., the contamination of food has been observed to occur either during the production or also due to inappropriate food handling that is during transportation or storage. The climatic changes have also been proven to food poisonings like the humidity and temperature differences. Nowadays, everyone is getting affected due to canned food and junk food as well, all because they do not provide a great quality because of the improper amount of Oxygen, Temperature, and Moisture Content varies from time to time. Also, the customers do not care about the conditions inwhich the food material was packed. An interactive process of utilizing Arduino-supported sensors is developed to detect food based on the same. The values are compared, and the spoilage is extent is also predicted using arithmetic calculations formulated using the appropriate surveillance and examination of the food.

IoT information describes the codependent cycle of physical objects-matters-embedded in conjunction with the sensors, software, and other technology to link and transform records with the marginal tool and distributing it over the net. Right here the bodily world meets the virtual they cooperate and speak. It is a community of computers, automatic gadgets, matters, animals, or public associated with a completely unique identifier (UID) and the ability to transmit facts over a network. [8]

An operational item could be a heart transplant, a farm animal with a biochip transponder, an automobile with sensors built into it to alert the chauffeur whilst the tire pressure is low or another artificial one. An item that may be given an Internet Protocol (IP) address and be able to transmit statistics over the community.

In electronic components, certain set of instructions are necessary to be carried out to establish a smooth flow of information within electronic circuits. Certain protocols in communication like RS232, SPI and I2C are especially useful to reduce hardware complexities.

Growing up, groups in assorted industries are employing IoT to function extra efficaciously, higher recognize customers to supply progressed customer support, enhance

selection- making and growth commercial enterprise value. The Internet of Things technology is employed in here to detect food spoilage. The way includes multiple sensors such as an MQ3 sensor, 16x2 LCD Display, and ESP8266 microcontroller. Therefore, the prevention of the decay should be practiced preventing wastage as well.

I. METHODOLOGY

A. *Components and Theory*

a) NodeMCU 1.0: The NodeMCU is a microcontroller board based on the ESP8266 (12-E) module. The fact it is Wi-Fi enabled and its deep-sleep operation, its processing power make it ideal for IoT projects and cloud server linking. NodeMCU can be powered by a micro-USB socket and a VIN pin (external power pin). The NodeMCU connects to the nearest available Wi-Fi network, and the data captured by the GPS module is sent to Firebase over the Wi-Fi network. This feature of it makes it the best fit for holding the alcohol-exposed sensor and forecasting the data gathered to the cloud, where it could be programmed to give more plausible forms of representation like graphs, gauge meters, and so on.

Fig 1.1 NodeMCU 1.0

b) 16x2 LCD Display: LCD stand for liquid crystal displays. It is also called character LCD because it displays characters. 16 x 2 indicates 16 characters in each column and 2 indicates 2 rows. Each letter has a 5 x 8-pixel grid Its working voltage is 4.7V to 5.3V. LCD has a parallel interface. The interface consists of the following branches:

- A Register-Elect (RS) branch that controls where to write to the LCD's memory. You can choose either the data register, which contains what is displayed on the screen or the instruction register, which looks for instructions on what the LCD controller should do next.
- A read/write (R/W) branch that selects read or write mode.
- An enable branch that allows writing to the data branch of register 8 (D0-D7). The land (high or low) of these legs is the bit to write to the register on writes, or the value read on reads.

Fig 1.2 16x2 LCD Display

c) I2C Module: Connecting the journal to a similar accessory such as the I2C Quotidian Interface Accessory Module with the PCF8574 chip makes it easy to work with only two legs. The journal interfaces accessory can be connected to a 16x2 LCD and provides two signal branches (SDA and SCL) that can be used for communication. (4)

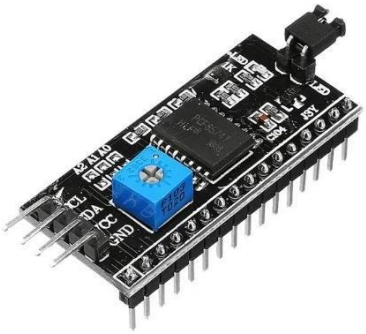

Fig 1.3 I2C Module

d) MQ3 Sensor: MQ-3 module is suitable for the detection of alcohol, gas, methane, LPG, and carbon monoxide. The touchy fabric of the MQ-three gas sensor is Tin [IV] Oxide, which has low conduction in thin air. when the alcohol gas of interest is activated, the conductivity of the sensor will become better and the recognition of the fuel increases. This sensor provides an equivalent resistance to exposure to alcoholic substances based totally on alcohol alertness, whilst alcohol gas is active, sensor conductivity will increase with increasing gasoline attention. there is a mutable resistance generated in the sensor that adjusts when alcohol is detected, the extra alcohol the lower the resistance. Measuring this resistance measures the alcohol. The sensor and weight resistance form a voltage divider, and the lower the sensor resistance, the better the voltage size possible. (6)

Fig 1.4 MQ3 Sensor

e) Blynk: Using Blynk, you can remotely control your hardware, view device status, and values recorded by the sensors, visualize it using a gauge meter, map plots, and graphs, and perform many different features. The Platform has 3 major components:
Blynk App – you may use various widgets we provide to create a stunning interface in for initiatives.
Blynk Server is liable for all directives between smartphones and electronic ironware. You may use Blynk Cloud or a custom Blynk server regionally. Its miles open supply and may effortlessly manage lots of devices, even booting on a Raspberry Pi. [11].

B. Circuit

The MQ3 sensor is connected to a NodeMCU ESP8266 microcontroller. The AOUT pin is connected to the analog input pin of the microcontroller. The sensor detects the level of Methane-emitted from the food of interest. According to the MQ3 sensor's analog measurement scale, food is considered spoiled if the value recorded by the sensor is greater than 250 and less than 400. The sensor requires calibration due to its sensitivity. This data is sent to the 16X2 LCD through the I2C module. Connecting an LCD directly to a NodeMCU board is a very tedious task. 12 jumper wires are required to connect the LCD to the microcontroller board. An external potentiometer is also required to adjust the contrast of the LCD. The I2C module reduces the connections to 4 wires for power pins and SCL and SDA pins for communication. This is an IoT-based system where the required information is sent to the customer/user. The ESP8266 board has a built-in Wi-Fi module, so it is connected to the internet. The IoT platform used to log and display sensor information is Blynk IoT. From anywhere in the world, at any time, from any device, you can use the Internet of Things to observe food spoilage affected by the components of the ecosystem.

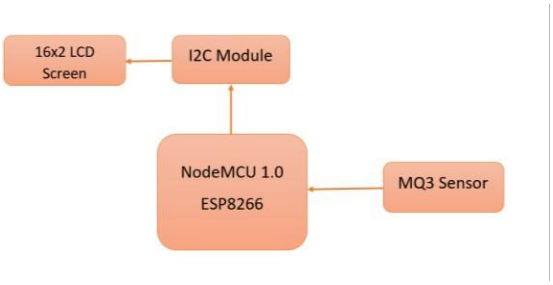

Fig 1.5 Block diagram of the proposed system.

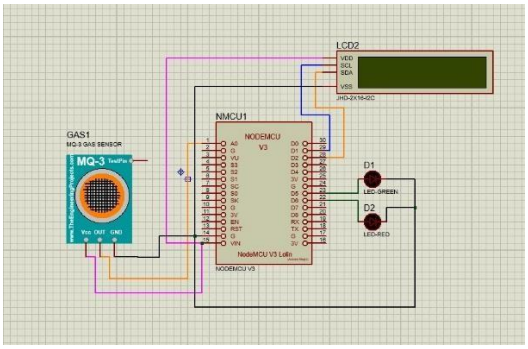

Fig 1.6 Circuit Simulation in Proteus

C. Testing

It was carried out at the initial stage with a sample of an apple (Fig. 1.7(a)). Re-inspection was carried out to decide the optimum value of methane level as a threshold value. In that case, it was also ensured that the sensor is calibrated. A mobile phone was used as a secondary device for the display of sensor data on the IoT cloud server as shown below (Fig 1.7(b)).

Fig 1.7(a) Testing on an apple (pure sample)

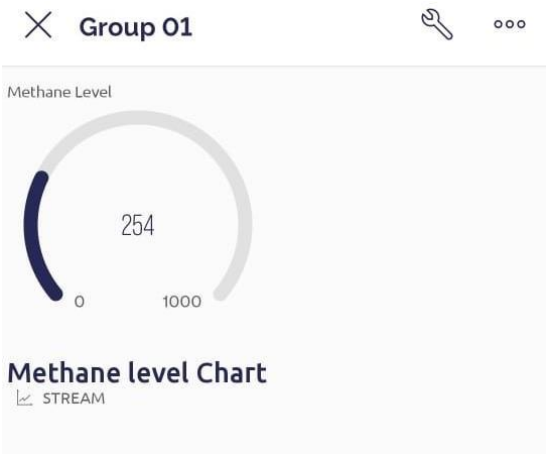

Fig 1.7(b) Methane levels on Blynk cloud

III. Results and Discussions

The methane levels were shown on the LCD along with inference on whether the food is spoiled or safe to eat. The Blynk cloud server will display the live data of methane levels in the form of a gauge meter. In such a manner, food spoilage can be detected.

IV. Future Scope

Our food spoilage detection system is fully functional at this stage. We were subjecting this system to fruits andno other food items like butter, milk, and so on which require a viscosity sensor for detecting their purity. This project can be enhanced by developing a technology to sense food spoilage for packed foods.

V. Conclusion

Food Spoilage Detection system is a very crucial technology in Food Industry that deals with using natural raw materials to prepare food items. It also depends on agricultural output like fruits, vegetables, and herbs for food manufacturing where constant spoilage monitoring becomes a necessity. Such systems can be further advanced and be helpful for industrial innovationand the nutritional growth of human beings.

Acknowledgment

The food Spoilage Detection system is a very crucial technology in Food Industry that deals with using natural raw materials to prepare food items. It also depends on agricultural output like fruits, vegetables, and herbs for food manufacturing where constant spoilage monitoring becomes a necessity. Such systems can be further advanced and be helpful for industrial innovationand the nutritional growth of human beings.

References

[1] Voorugonda Madhuri, Student, Dept. of ECE, Kakatiya Institute of Technology and Science, Warangal.
[2] Arun Kumar G Department of Electrical and Electronics Engineering PSG Institute of Technology and Applied Research, Coimbatore, Tamil Nadu, INDIA.
[3] B.Ravi Chander 1 , P.A.Lovina 2 ,G.Shiva Kumari3 1,2&3AssistantProfessor, Dept. of ECE, St.Martin's Engineering college, Dhulapally(v), kompally,Secunderabad 500100 Telangana state, India.
[4] https://components101.com/modules/i2c-serial-interface-adapter- module
[5] https://components101.com/development-boards/nodemcu-esp8266- pinout-features-and-datasheet
[6] https://components101.com/sensors/mq-3-alcohol-gas-sensor
[7] https://create.arduino.cc/projecthub/akshayjoseph666/interface-i2c- 16x2-lcd-with-arduino-uno-just-4-wires-273b24
[8] https://www.techtarget.com/iotagenda/definition/Internet-of-Things-IoT
[9] https://data-flair.training/blogs/iot-technology/#:~:text=Some%20of%20the%20major%20IoT,requireme nt%20of%20an%20IoT%20system.
[10] https://wisilica.com/company/top-6-iot-communication-protocols/
[11] https://docs.blynk.cc/#:~:text=Blynk%20App%20%2D%20allows%2 0to%20you,your%20private%20Blynk%20server%20locally.