IJNRD.ORG ISSN : 2456-4184
INTERNATIONAL JOURNAL OF NOVEL RESEARCH AND DEVELOPMENT (IJNRD) | IJNRD.ORG
An International Open Access, Peer-reviewed, Refereed Journal

A BRIEF REVIEW ON GAS CHROMATOGRAPHY

Joshi K.C.1* , swami J. U. 2* ,Bavge S.B.3* parikh B.R. 4*

1,2Department of Pharmaceutical chemistry is, Latur College of Pharmacy Hasegaon, Tq. Ausa, Dist.Latur 413512, Maharashtra. India.

3Department of Pharmacognosy, Latur College of Pharmacy Hasegaon, Tq Ausa, Dist. Latur413512, Maharashtra, India.

Abstract :-

Gas chromatography is a general term for a group of analytical separation methods for analyzing volatile substances in the gas phase. Gas chromatography separates analytes by dissolving the components of a sample in a solvent and evaporating them to separate the sample into two phases, the stationary phase and the mobile phase. The mobile phase is a chemically inert gas that serves to transport the analyte molecules through the heated column. Gas chromatography is one of the only chromatographic formats that does not use a mobile phase to interact with analytes. The stationary phase is either a solid adsorbent, called gas-solid chromatography (GSC), or a liquid on an inert support,called gas-liquid chromatography(GLC).Gas chromatography is an instrumental technique used forensically in drug analysis, arson, and toxicity analysis of other organic compounds.

Keywords:- Gas ,column, mobail phase, stationary Phase, pressure

Introduction :-

Gas chromatography is a widely used analytical technique for separating and analyzing gaseous and volatile compounds. In 1952, James & Martin invented modern gas chromatography. Although this technique was first used to separate amino acids since the early 1950s, GC now has a wide variety of applications due to its speed and sensitivity. GC can perform both qualitative and quantitative analysis. Even trace amounts of samples can be analyzed by GC. Gas chromatography involves dissolving a sample in a solvent and evaporating it to separate the analytes. The sample is separated into two phases, the stationary phase and the mobile phase. The mobile phase is a chemically inert gas such as helium or nitrogen. Gas chromatography is one of the unique chromatographic formats that does not require a mobile phase to interact with analytes.

Principle :-

A sample solution injected into the instrument enters a gas stream that carries the sample into a separation tube called a 'column'. (Helium or nitrogen is used as a so-called carrier gas.) Each component is separated in the column.

Diagram :-

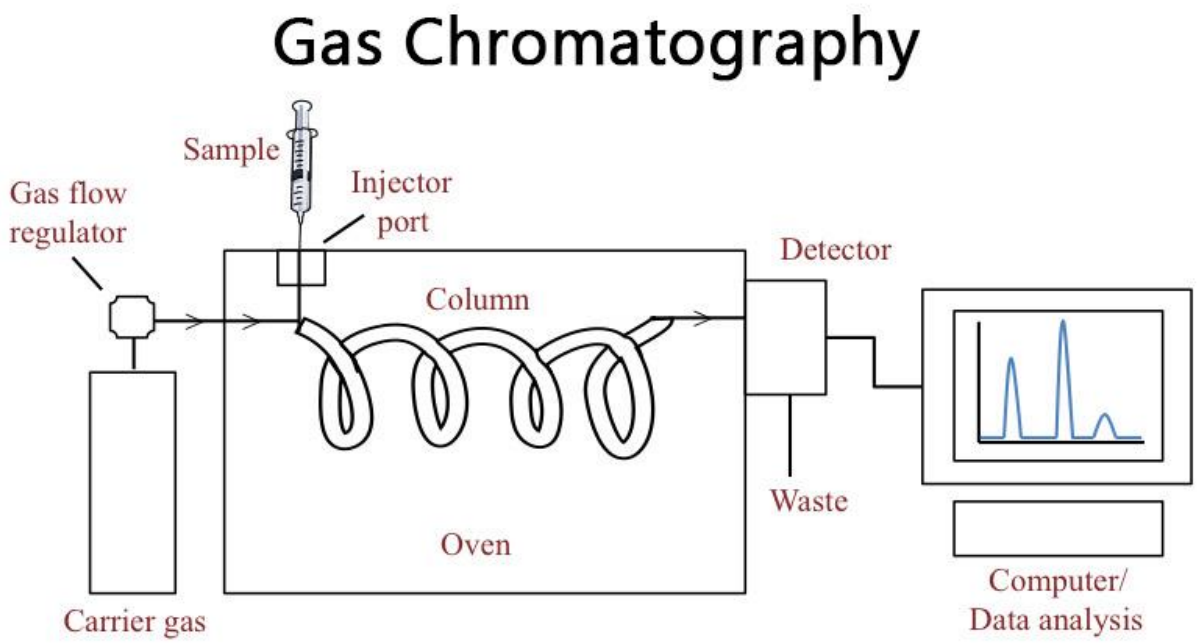

Instrumentation :-

1) **Sample injection system:**

A sample port is required to introduce the sample to the top of the column. Using a calibrated micro syringe, transfer the sample volume through a rubber septum into the vaporization chamber. Most separations require only a fraction of the initial sample volume and use sample dividers to discard excess sample. Commercial gas chromatographs use both split and split injection when switching between packed and capillary columns. The evaporation chamber is typically heated 50 °C above the lowest boiling point of the sample and mixed with a carrier gas to transfer the sample onto the column.

2) **Carrier Gas:**

Carrier gas plays an important role in GC. It should be inert, dry and oxygen-free. Helium, nitrogen, argon, and hydrogen gases are used as carrier gases, depending on desired performance and the detector used. Carrier gas is supplied under high pressure and delivered to the instrument at a rapid and reproducible rate

3) Separation columns:

GC uses open tubular or capillary columns and packed columns. The first type of capillary column is the wall-coated open-tube column (WCOT) and the second type is the support-coated open-tube column (SCOT). WCOT columns are coated with a thin layer of stationary phase along the column wall. SCOT columns are first coated with a thin layer of an adsorptive solid such as diatomaceous earth, a material composed of the skeleton of single-celled marine plants, on the column wall. The adsorbed solid is then treated with a liquid stationary phase. SCOT columns have a higher sample capacity and can hold more stationary phase than WCOT columns, but WCOT columns still have higher column efficiencies. His one of the most common types of capillary columns is called a coated fused silica open tube column.

4) Column Oven or Water Bath:

A water bath is used to regulate the temperature of the column for precise operation. The oven can be operated in two ways: isothermal programming or temperature programming. Isothermal programming keeps the column temperature constant throughout the separation. The temperature programming method raises the column temperature continuously or in steps as the separation progresses.

5) Detectors:

The most common types of detectors used in GC are: Chemiluminescence detector. The detector is located at the end of the column and quantitatively measures the components of the mixture that elute with the carrier gas.

6) Amplification and recording system:

These are the final components of the GC instrumentation. These are designed to record the signal from the detector. They use special electronic circuitry to process and amplify the signal in order to display it in an easy-to-understand graphical format showing multiple peaks of the constituents of the sample being analyzed. International Journal of Information and Computing Science Volume 5, Issue 7, July 2018 ISSN NO: 0972-1347http://ijics.com/127

Chromatographic analysis :-

The number of peaks determines the number of components present in a particular sample, the identities of components are determined by their characteristic retention times, and the amount of components in a particular sample is the area under the peaks. determined by [1]

Detectors used in GC:-

Detection devices for a GC must respond rapidly and reproducibility to the low concentrations of the solutes emitted from the column.

1) Concentration dependent detectors:
   - Thermal conductivity detector(TCD)
   - Electron capture detector(ECD)
   - Argon ionization detector
   - Helium ionization detector

2) Mass flow dependent detectors:

   - Flame ionization detector(FID)
   - Nitrogen phosphorous detector(NPD)
   - Flame photometric detector(FPD)

Gc analysis of petroleum products:-

Petroleum products such as jet fuel gasoline, diesel, and kerosene are also analyzed by GC.Test parameters include Column-supeul –Q PLOT, Oven - 35 degrees Celsius, 16 degrees per minute. Up to 250 degrees Celsius, detector - TCD, carrier gas - He, sample jet fuel. We also perform GC analysis of water and gasoline.

Applications :-

- Qualitative Analysis.
- Quantitative Analysis.
- Separation of fatty acids derived from fixed oils
- Miscellaneous-analysis of foods like carbohydrates, proteins, lipids, vitamins, steroids, drug and pesticides residues, trace elements
- Pollutants like formaldehyde, carbon monoxide, benzen, DDT ete
- Dairy product analysis-rancidity
- Separation and identification of volatile materials, plastics, natural and synthetic polymers, paints, and microbiological samples
- Inorganic compound analysis
- Residual solvent analysis.

Conclusion:-

From this we can conclude that GC is currently the most widely used analytical technique for the separation and identification of compounds or complex mixtures.

GC has become the most widely used technique due to its speed, excellent resolution, sensitivity at a few mg of sample, and excellent accuracy and precision.

Reference :-

makes GC most widely used technique are it's speed, good resolving power, sensitivity

1.https://chem.libretexts.org/Textbook_Maps/Analytical_Chemistry/Supplemental_Modules (Analytical_Chemistry)/Instrumental_Analysis/Chromatography/Gas_Chromatograph.

2. Santos, F., and Galceran, M. (2002). The application of gas chromatography to environmental analysis. TrAC Trends in Analytical Chemistry, 21(9-10), 672–685.

doi:10.1016/s0165-9936(02)00813-0

3. Lehotay, S. J., and Hajšlová, J. (2002). Application of gas chromatography in food analysis. TrAC Trends in Analytical Chemistry, 21(9-10), 686–697. doi:10.1016/s0165-9936(02)00805-1

4. Choudhary, V. R., and Doraiswamy, L. K. (1971). Applications of Gas Chromatography in Catalysis. Industrial & Engineering Chemistry Product Research and Development, 10(3), 218–237. doi:10.1021/i360039a002

5. Anton, A. (1968). Application of gas chromatography to qualitative and quantitative copolyamide analysis. Analytical Chemistry, 40(7), 1116–1118. doi:10.1021/ac60263a040

6.https://www.slideshare.net/banuman35/applications-of-gas-chromatography-applications-of-gc-by-pravisankar

7. Linde AG. Gas Chromatography. Archived from the original on 3 March 2012. Retrieved 11 March 2012.

8.https://www.omicsonline.org/development-and-validation-of-a-gas-chromatography-mass-spectrometry-method-for-the-determination-of-pcbs-in-transformer-oil-samples-application-on-real-samples-from-botswana-2157-7064.1000116.php?aid=3620

9.https://www.omicsonline.org/method-validation-for-the-trace-analysis-of-geosmin-and-2-methylisoborneol%20in-water-by-salt-free-purge-and-trap-sampling-gc-ms-using-the-eclipse-4660-sample-concentrator-2157-7587.1000134.php?aid=7490