IJNRD.ORG ISSN : 2456-4184
INTERNATIONAL JOURNAL OF NOVEL RESEARCH AND DEVELOPMENT (IJNRD) | IJNRD.ORG
An International Open Access, Peer-reviewed, Refereed Journal

"SOLAR POWERED BATTERY CHARGING WITH REVERSE CURRENT PROTECTION"

MOHAN C GOWDA **USN: 1DA19EC081**
AKHIL P **USN: 1DA19EC009**

Under the Guidance ofMs.
KAVYA S
ASSISTANT PROFESSOR, Department of ECE, Dr. AIT, Bengaluru - 560056

CHAPTER 1

INTRODUCTION

1.1 ABSTRACT

Given the current energy crisis and increasing need for sustainable energy, we endeavoured to create a cost-effective, small-scale electrical generator which could be used to power consumer electronics. Solar energy has proven its worth as an alternative energy source because it is low-impact and emission-free. It has been implemented with much success for power grids with hundreds of acres of enormous solar concentrators.

By means of the solar charging and reverse charging protection system, a solar panel can be controlled to charge the storage battery, and the storage battery cannot conduct reverse charging on the solar panel.

So, we demonstrate this concept by using a mini solar panel to charge a rechargeable pencil cell battery. Also, we use a charge control circuit designed to stop reverse current flow and charge the battery effectively using the solar panel. Thus, this allows us to effectively provide solar battery charging with reverse current protection.

1.2 OVERVIEW

In the small-scale, solar energy has been harvested through the use of photovoltaic (PV) panels and have been used to power anything from an iPod to a residential home. Although PV systems are considered part of the green energy revolution, materials utilized for its construction (like silicon) are extremely dangerous to the environment and much care must be taken to ensure that they are recycled properly.

Solar energy is a very efficient source of green energy that is available for free. But it needs to be coupled with proper storage for best use. Also, to store it we need to use charge controlling circuitry to protect panel from reverse currents as well as to charge the battery efficiently.

PV cells also only utilize the energy stored in specific wavelengths of light and therefore have an approximate efficiency between 14-19%.

Sunlight, however, produces immense amounts of heat which only serves to heat up the surface of the solar cell. Although there are some PV cells that have reached efficiency levels over 40% (world record is 41.6%), they are enormously complex and expensive.

Rationality behind the project:-

1. Solar is a Safe, Clean Energy Source.
   - ➔ Solar panels do not emit greenhouse gases such as carbon dioxide when they are generating electricity is without question. This is why they are beloved of many who worry about the climate-altering potential of such gases.
   - ➔ Solar energy is created by nuclear fusion that takes place in the sun. Fusion occurs when protons of hydrogen atoms violently collide in the sun's core and fuse to create a helium atom.
   - ➔ Compared to other non-renewable sources, solar is a safe and clean renewable resource that is present abundantly in nature.
   - ➔ Solar power when harnessed does not emit any harmful gases such as carbon monoxide, carbon dioxide, etc...

2. You can Save Money Through Solar Power.
   - ➔ It's a well-known fact that the planet is suffering, and many factors are making it worse. This sadly includes the energy and electricity we use daily; however, by switching to solar power, you can reduce the amount of electricity you use and make the world a better place. You can even save money with solar power.
   - ➔ By using solar power, you'll be getting all of the energy you need from a free source. This way, you end up saving money on your electricity bills. However, this depends on your system size, how many solar devices you have, and how often you use your regular electricity and heat.
   - ➔ You may not see solar savings right away because most of the cost of solar expenses associated with installing a solar panel system are upfront costs and don't generate any immediate return for years. That said, there are many factors to consider when deciding whether or not it's worth going solar that go beyond just how much you'll spend in the long run.
   - ➔ Energy costs have been steadily increasing over the years, and solar power systems will save you money in the long run.

3. You Can Fight Climate Change and Protect Wildlife with Solar Power.
   - ➔ As a renewable source of power, solar energy has an important role in reducing greenhouse gas emissions and mitigating climate change, which is critical to protecting humans, wildlife, and ecosystems.
   - ➔ Solar energy can also improve air quality and reduce water use from energy production.

4. Solar Power Provides Stability to The Electric Grid.
   - ➔ Utility-scale solar and wind power plants are conceptually similar to conventional generators, they generate electricity where the necessary

     resources are located, typically in remote areas where the sunlight is most abundant.
   - ➔ These attributes consolidating variable individual loads into more predictable regional loads, siting plants near their resource base, and extensive transmission lines help the grid provide electric power with good reliability and low cost.

5. Solar Power is Always Available.
   - ➔ Solar energy is any type of energy generated by the sun.
   - ➔ solar power is a renewable and infinite energy source which creates no harmful greenhouse gas emissions, as long as the sun continues to shine, energy will be released.
   - ➔ Solar energy is constantly flowing away from the sun and throughout the solar system.
   - ➔ The energy, heat, and light from the sun flow away in the form of electromagnetic radiation (EMR).

6. Solar Power Boosts Home Values.
   - ➔ The home solar panels system can add value to your homes in two ways – consumption value and investment value.
   - ➔ Consumption value refers to the environmental benefits, reduced energy bills, freedom from the grid, and other such advantages offered by solar systems. This depends on factors such as: location, quality and size of installation, etc...
   - ➔ Investment value is the value added to the property in monetary terms. A rough estimate of monetary addition to property value is calculated as: for every 1 kW of solar power installation, the home value goes up by some value.
   - ➔ A solar energy system in an environmentally-conscious solar-friendly locality adds more worth than in a less active solar market.
   - ➔ Luxury homes with solar installation get a bigger boost in property value than moderately-priced homes.
   - ➔ In general, solar panels can increase your home value by minimum of 3-4%.

7. Solar power allows you to be energy independent.
   - ➔ Solar systems produce an unpredictable amount of power during the day as the sunlight changes and that quantity of power is independent from how much power you're using in that moment.
   - ➔ Solar systems are set up to be able to detect whether or not power is coming across the grid so when the grid is down, solar systems also shut down.
   - ➔ The grid regulates your power intake by acting as a massive storage system that your solar power feeds into and allows you to draw from.

8. Solar Power is Good for the Environment.
   - ➔ Solar energy is clean, efficient, and sustainable for your household or workplace.
   - ➔ Solar panels have no emissions whatsoever hence a guarantee of no carbon footprint if you depend on the natural energy.
   - ➔ The clean energy produced by solar panels quickly compensates for the energy required to manufacture them. Combined with other positive environmental impacts such as reductions in water usage, consumers can rest assured that solar panels have a substantial positive effect on the environment.
   - ➔ Homes on the electric grid are typically powered by coal-fired power plants. When you compare the impacts of solar, it's easy to see how solar panels help the environment.
   - ➔ Installing solar is the best thing you can do to benefit the environment. The average solar system generates the same amount of clean energy as driving 16,000 miles.

1.3 PROBLEM STATEMENT

The electricity necessities of the world are elevated at an unconventional rate and the power demand has been increasing.

The fossil fuels and other conventional non-renewable resources which are presently used for the generation of electricity or electrical energy are not sufficient to keep up with the ever-increasing demand of electricity in the world.

The generation of electrical power by cold based steam power plant and nuclear power plants causes pollution, which is harmful to the current and future generation.

The proper uses of solar energy and its different application which are used at home, defence sectors, etc... are not sufficient to keep up with the ever-increasing demand of electricity in the world.

Nowadays in modern times, the demand for power and energy is ever-increasing. And the resources we use for these purposes are non-renewable resources and are harmful to the environment and the ecosystem.

Hence the use of renewable resources is being implemented. Despite these issues the implementation of renewable energies-based projects which are also safe for the environment are not proceeding as planned.

The people still go for non-renewable sources such as coal, etc… for power and electricity as it is faster and quicker than renewable resources that take time. These non- renewable resources are harmful to the environment.

1.4 OBJECTIVE

- <u>The main objectives are</u> :-

➢ "To design a device that will help keep electronic device service by providing the electronic device user with a portable personal charging and protective system".

One of the main objectives of this project is to design and build a device that will keep the electronic device in on state by attaching it to a solar portable personal charger with a protective system as not to harm the battery when there is a sudden surge in the current.

When one is travelling a long distance then they need to carry a portable charger for their electronic devices else they will run out of battery soon but what if they are travelling in a barren land and there is no socket to recharge your electronic devices as well as your portable charger, this is where our project comes in- with a solar portable charger at hand at all time even when travelling through a barren land you can charge your electronic devices as well as your portable charger just by leaving it out in the sun for a few hours.

- "To provide constant electricity supply or those on the go with portable solar power charging systems (with or without battery) to power their electronic devices to enable them to use them whenever they want".

The other objective is to provide your electronic devices with a constant electricity supply irrespective of whether they have a battery or not.

As explained earlier, with a solar powered portable charger you can charge or power your electronic devices and use them whenever you wish irrespective of where you are.

- "To protect the electronic devices from reverse current which can damage the battery".

The last main objective of this project is to protect the device and battery from the reverse current.

When the solar portable charger is fully charged if not protected will be affected by the reverse current generated when the battery is fully charged and will damage the battery and the device. It is the same case when a device is being charged with the help of the solar portable charger, once the battery is fully charged the reverse current is generated which will damage the batteries of both the charger and the device if not protected.

CHAPTER 2

LITERATURE REVIEW

2.1 LITERATURE SURVEY

- C.E.Kennedy and H.Price - "Progress In Development of High Temperature Solar Selective Coating", Proceedings of ISEC2005.
  Conference: ASME 2005 International Solar Energy Conference,
  August 6-12 2005, Orlando, Florida, USA.

- The objective of this effort was to develop new, more-efficient selective coatings with both high solar absorptance and low thermal emittance that are thermally stable above 500°C, ideally in air, with improved durability and manufacturability and reduced cost.

- T. Miyasaka, T.N. Murakami - "The photocapacitor: an efficient self-charging capacitor for direct storage of solar energy", Appl. Phys. Lett., 85 (2004), pp. 3932-3934
  Published Online: 29 October 2004.

- A light-driven self-charging capacitor was fabricated as an efficient solar energy storage device.

- Takshi, H. Yaghoubi, T. Tevi, S. Bakhshi - "Photoactive supercapacitors for solar energy harvesting and storage"
  J. Power Sources, 275 (2015), pp. 621-626
  Department of Electrical Engineering, University of South Florida, Tampa,
  FL 33620, USA
  Published online: 11 November 2014.

- In most applications an energy storage device is required when solar cells are applied for energy harvesting. In this work, they have demonstrated that composite films of a conducting polymer and a dye can be used as photoactive electrodes in an electrochemical cell for concurrent solar energy conversion and charge storage.

CHAPTER 3
DESIGN AND METHODOLOGY

3.1 BLOCK DIAGRAM

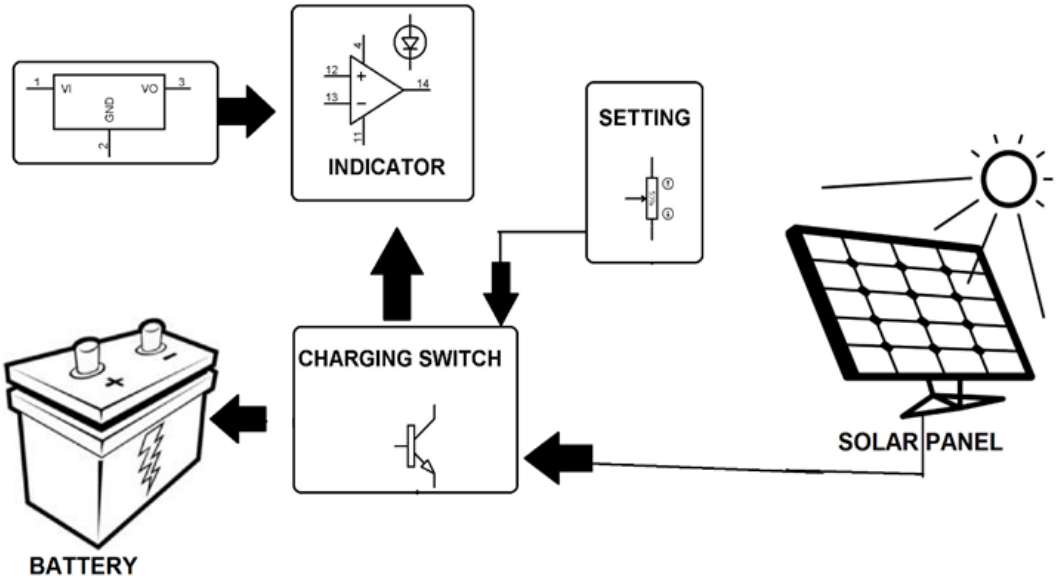

Fig 3.1: BLOCK DIAGRAM

3.2 METHODOLOGY

To achieve the aim and objectives of this work, the following are the steps involved:

1. Study of the previous work on the project so as to improve it efficiency.

   ➔ Before implementing any project, one should study the previous work on that project or any similar works as to improve its efficiency and also to improve the quality of the project so it may give the most output as possible.

2. Draw a circuit diagram.

   ➔ A circuit diagram has to be plotted and drawn as to be familiar with the components and its functions and also which component will go where when building the project.

3. Test for continuity of components and devices.

   ➔ After the circuit diagram is drawn and the components are purchased, the next step is to test for the durability and the continuity of the devices and components required for the project. This is to prevent any mishap in the future when the project is being implemented and during the testing phase of the project.

4. Design of the system was carried out.

➔ After checking the continuity of the components and the devices, next the design for the project should be carried out as to be effective in the design and working of the project.

5. Studying of various component used in circuit.

➔ After the design is drawn then the study of the various components which will be used in the circuit should be done as to be proficient in the knowledge of which components are being used in their project.

6. Construct of the system circuit.

➔ Then the construction of the system circuit should be done and verified.

7. Finally, the whole device was cased and final test was carried out.

➔ Then the whole device should be connected together and tested for its proficiency. Multiple tests should be carried out as to check the different durability and the proficiency of the project.

3.3 CIRCUIT DIAGRAM

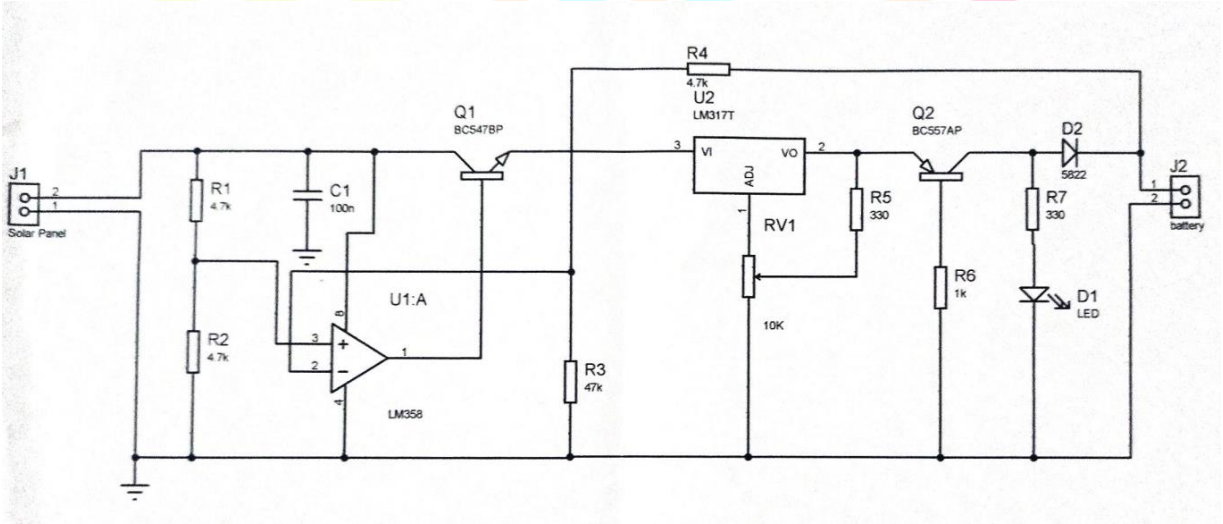

Fig 3.3: CIRCUIT DIAGRAM

3.4 HARDWARE REQUIREMENTS

➢ 3W Solar Panel

➔ This 3W solar panel is an 18-solar cell assembly (9V) mounted onto a TPT backplate and covered with rigid tempered glass which protect the solar cells inside, also a white plastic frame is involved here, in the sense that the white plastic frame covers it.

➔ The cell is highly efficient polycrystalline solar cell. This small solar panel is lightweight and durable. It's also waterproof, UV resistant and scratch resistant.

➔ **Features:**

> High efficiency polycrystalline solar cell

> Tempered glass laminated, durable and long lasting

> Positive tolerance power, consistent appearance

> Waterproof, UV resistant
> Excellent performance at weak light condition
> With white plastic frame

Fig 3.4.1 3W Solar Panel

- AA Rechargeable Batteries

➔ The set of eight AA batteries from is a great household pack for keeping remotes, cameras, and kids' toys up and running year-round. They're also made from 4% recycled batteries, which makes them that much more environmentally friendly.

➔ These batteries are pre-charged and ready to use right out of the package and can be recharged about 1,000 times in their lifecycle, potentially replacing hundreds of single-use batteries.

➔ Each charge gives these batteries 5.5 to 8 hours of use. That's quite a bit of time for devices that are used infrequently or draw a minimal amount of power, like TV remotes or flashlights. But if you want to use these in electronics that are on for longer stretches of time or use a lot of power, like a set of string lights or a video game controller, you may find you need to recharge these batteries pretty frequently.

Fig 3.4.2 AA Rechargeable Batteries

- Resistors

➔ Building the circuit requires the knowledge of various components like resistors, inductors, capacitors, battery sources, connecting wires and more. The resistor is one of the main components of the circuit.

➔ A passive electrical component with two terminals that are used for either limiting or regulating the flow of electric current in electrical circuits. The SI unit of resistor is Ohm. Each resistor has one connection and two terminals.

➔ The terminals of the resistor are each of the lines extending from the squiggle (or rectangle). Those are what connect to the rest of the circuit. The resistor circuit symbols are usually enhanced with both a resistance value and a name. The value, displayed in ohms, is obviously critical for both evaluating and actually constructing the circuit.

➔ In this project we have used 3 resistors having value of 4.7k ohms, one resistor having value of 47k ohms, another one resistor having value of 1k ohm and finally 2 resistors having value of 330 ohms. We have also used a variable resistor of value 10k ohms as the resistor's values will not be accurate and we might need the extra ohms.

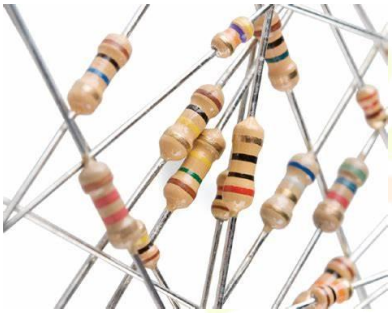

Fig 3.4.3.1 Resistors

Fig 3.4.3.2 Variable resistor

- Capacitors

➔ A capacitor is a device that stores electrical energy in an electric field. It is a passive electronic component with two terminals.

➔ The effect of a capacitor is known as capacitance. While some capacitance exists between any two electrical conductors in proximity in a circuit, a capacitor is a component designed to add capacitance to a circuit. The capacitor was originally known as a condenser or. This name and its cognates are still widely used in many languages, but rarely in English, one notable exception being condenser microphones, also called capacitor microphones.

➔ Here we have used a capacitor of value 100nF.

Fig 3.4.4 Capacitors

- Transistors

➔ A transistor is a type of a semiconductor device that can be used to both conduct and insulate electric current or voltage. A transistor basically acts as a switch and an amplifier.

➔ A typical transistor is composed of three layers of semiconductor materials or more specifically terminals which helps to make a connection to an external circuit and carry the current. A voltage or current that is applied to any one pair of the terminals of a transistor controls the current through the other pair of terminals. There are three terminals for a transistor.

➔ Here we have used transistors namely – BC547BP and BC557AP respectively.

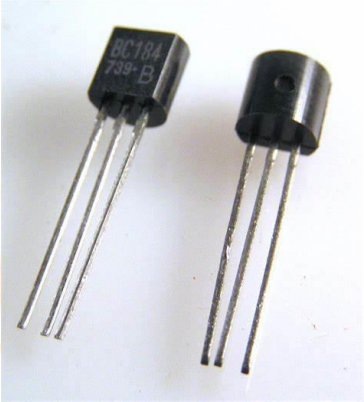

Fig 3.4.5 Transistors

- Integrated circuits

➔ The circuits that were made previously were large and bulky, consisting of circuit components like resistor, capacitor, inductor, transistor, diodes, etc., which were connected with copper wires. This factor limited the use of the circuits to big machines. It was not possible to create small and compact appliances with these big circuits. Moreover, they were not entirely shockproof and reliable.

➔ As it is said, necessity is the mother of all inventions. So, there was a need to develop smaller size circuits with more power and safety to incorporate them into devices. Three American scientists invented transistors that simplified things to quite an extent, but the development of integrated circuits changed electronics technology's face.

➔ Here we have used 2 integrated circuits namely – LM358 and LM317T respectively.

Fig 3.4.6.1 LM358 Transistor

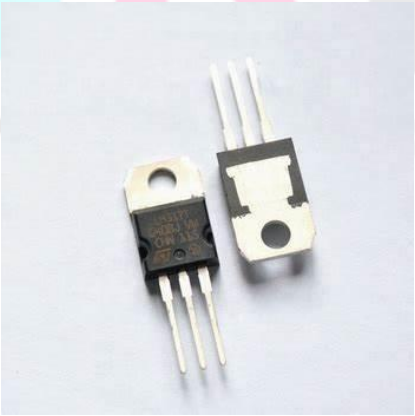

Fig 3.4.6.2 LM317T Transistor

- Wires and Connectors

  - The power and communications board will need to be directly connected to the power supply. You will need to wire power to each of your boards from your power and communications board.
  - As simple as this sounds, it can make a huge difference. These things are small, easy to drop, and tough to align. The proper technique can make this much easier.
  - If you have access to a crimping tool, you're set. Otherwise, use a set of needle nose pliers. First, crimp the tabs that are for the insulation. Once that is secure, then crimp the wire tabs. Doing it in this order will make it easier, as the wire crimp is the more important one and the assembly will be much more stable after the first crimp.

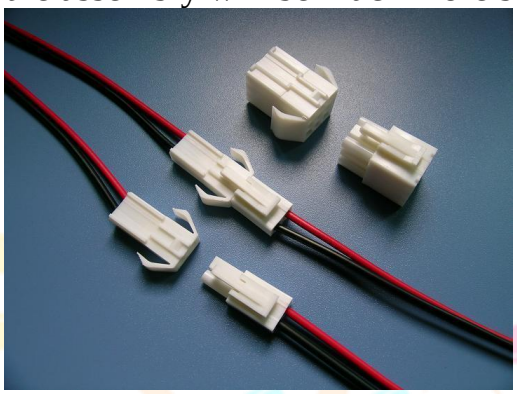

Fig 3.4.7 Wires and Connectors

- Diodes

  - A diode is a two-terminal electronic component that conducts electricity primarily in one direction. It has high resistance on one end and low resistance on the other end. LED is one such diode.
  - Diodes are used to protect circuits by limiting the voltage and to also transform AC into DC. Semiconductors like silicon and germanium are used to make the most of the diodes. Even though they transmit current in a single direction, the way with which they transmit differs. There are different kinds of diodes and each type has its own applications.
  - Here we have used one LED and one diode of value 5822.

Fig 3.4.8.1 Diode

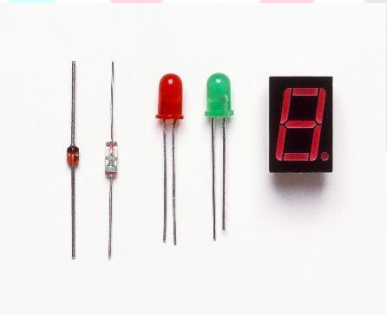

Fig 3.4.8.2 LED

- PCB board

  - A printed circuit board (PCB) or printed wiring board (PWB) is a laminated sandwich structure of conductive and insulating layers. PCBs have two complementary functions.
  - The first is to affix electronic components in designated locations on the outer layers by means of soldering. The second is to provide reliable electrical connections (and

also reliable open circuits) between the component's terminals in a controlled manner often referred to as PCB design.

- Each of the conductive layers is designed with an artwork pattern of conductors (similar to wires on a flat surface) that provides electrical connections on that conductive layer. Another manufacturing process adds vias, plated-through holes that allow interconnections between layers.

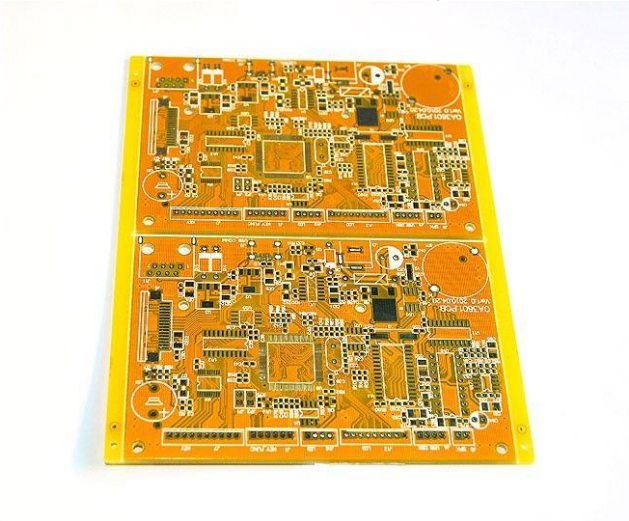

Fig 3.4.9 PCB Board

- Heatsink

- A heatsink is a passive heat exchanger that transfers heat. The heatsink is typically a metallic part which can be attached to a device releasing energy in the form of heat, with the aim of dissipating that heat to a surrounding fluid in order to prevent the device overheating.
- In many applications, the device is an electronic component and the surrounding fluid is air. The device transfers heat to the heatsink by conduction. The primary mechanism of heat transfer from the heatsink is convection, although radiation also has a minor influence.

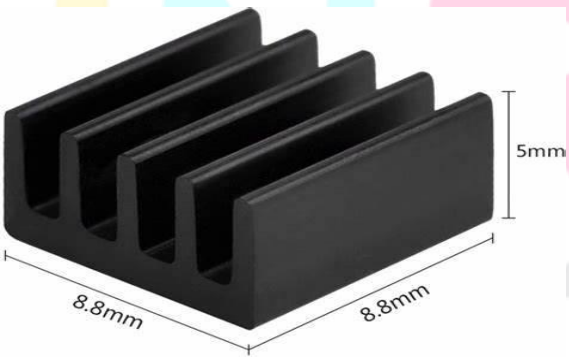

Fig 3.4.10 Heatsink

CHAPTER 4

RESULT AND CONCLUSION

4.1 REAL TIME APPLICATIONS

- The natural world has used the sun's energy since the beginning of time and while there has been lots of discussion about this, the truth is that the sun is both a problem and a solution. Solar energy is an unchanging constant.
- We are now harnessing its energy to replace traditional methods that have taken a toll on the planet. Instead of burning fossil fuels like coal and natural gases, consumers can take advantage of the infinite energy of the sun to power homes, cars and appliances.
- Solar energy can be used in everyday use for all purposes from boiling a pot of water to powering the lights in the house. It can be usen in water heating, generation of air inside the house, etc…
- Solar energy can be used for space heating of buildings in many ways. Collecting the solar radiation by some element of the building itself i.e., solar energy is admitted directly into the building through large South-facing windows. Using separate solar collectors which may heat either water or air or storage devices which can accumulate the collected solar energy for use at night and during inclement days.
- Some of the everyday uses of solar energy are:-

➢ Solar Transportation:

➔ Solar power is dependent on the weather and solar panels are costly now, but the benefit of this renewable energy is many. There are some very interesting transport innovations, some of which are being used and others which are soon going to be seen on roads.

➔ The concept of solar powered transportation is geared towards the saving of fossil fuels and one of the best ways to do it is to make public transport solar powered and efficient, thus reducing use of conventional cars while making use of clean energy.

➔ Shanghai introduced electric buses which run on solar energy. The 195 kW panels are not installed on the buses, but have been installed on the bus depot, where the buses are charged as they go about their routes. The depot produces enough electricity to charge 6 buses simultaneously and the annual power generated is approx. 20 MWh, which supplies electric power to buses.

- Out of the many trends of solar powered transportation, one which is gaining a lot of attention and implementation is bus stops which are solar powered. The tech is very simple – all that has to be done is install solar panels on top which would gather energy in the daytime and use the power to light up the bus info boards in the evening/night, as well as promotional panels. This idea has been implemented by the Clear Channel, UK, which used this idea for the Waterloo Bridge bus stop.
- There would be huge amount of energy generated if all bus stops had solar panels installed, and maybe this clean energy could be supplied to the grid, besides charging solar power buses.

Fig 4.1.1 Solar Transportation

- Solar Charging:

  - Solar energy has become one of the most valuable sources of renewable energy. People globally have gone solar since it helps reduce the ever-rising power utility bills.
  - The bulk phase is primarily the initial stage of charging a battery using solar energy. This first stage starts when the sun shines or when the generator is turned on.
  - The bulk phase will initiate when the battery reaches a low-charge stage, and that is usually when the charge is below 80%. In this stage, the solar panel puts into the cell as much amperage as possible. The voltage in the batteries rises gradually as they absorb the electricity.
  - The second stage of battery charging is known as the absorb stage. This stage is achieved when the batteries reach a charge of 14.4 to 14.8 volts or when the charge level is between 80 to 90% full.
  - Primarily, when the batteries reach this charge percentage, it enters into the absorb stage which also depends on the charge rate.
  - The above charge rate is basically for lead-acid batteries. The second stage halts as soon as the number of amps entering the batteries reaches a certain number that is pre-set or the programmed time elapses.
  - The third stage comes immediately after the absorb stage. This stage is initiated when the charge controller lowers the voltage to a specific pre-set value. The float stage is achieved when the batteries reach a charge level of 100%. It is essential for you to know how to program your controller well.

- ➔ The final stage or the Equalization stage is a controlled overcharge stage which is done periodically. The process of charging batteries using solar energy or the photovoltaic is different from using the mains power and needs to be approached differently.

Fig 4.1.2 Solar Charging

- Solar Heating:

  - ➔ Solar heating of the earth's surface and subsequent heating of the air near the ground play a major role in the formation of convective storms. Although the maximum solar radiation is received at the ground by approximately noon, the air near the ground continues to warm throughout the afternoon.
  - ➔ Solar heating is another way that converts solar energy to thermal energy. A solar heating reactor usually contains a concentrator and a receiver.
  - ➔ As sunlight can be regarded as parallel heating waves, a concentrator with a curved and glossy surface can focus the sunlight to a single receiver.
  - ➔ Besides water as the heating/chemical media, molten mineral salts can prove to be a good carrier for storing solar energy. Mineral salts can be molten at high temperatures and thus present high thermal potential for wide applications. Mineral salts also have the property of zero evaporation, beneficial to environment.
  - ➔ Solar heating systems may distinguish between a “decentralized” and a “centralized” approach. In a decentralized approach, the storage and collectors are placed within the individual houses like in an ordinary active solar heating system but of a larger size. In the centralized concepts, these components are centrally situated, that is, all solar heat is collected in one storage unit, from which the heat is distributed to the houses.
  - ➔ Solar heating technologies are also becoming more widespread, although China continues its long-term position as global leader in the manufacture and use of solar water heating equipment.

Fig 4.1.3 Solar Heating

- Solar Lighting:

  - Solar lights are the new breakthrough in technology. Cost-efficient and used for both indoor and outdoor lighting purposes, they are a new and advanced technology which cannot be even compared to the conventional methods of lighting—bringing a lot of benefits to the table.
  - These lights collect solar energy and transform it into lighting—through a technology called the photovoltaic effect which is used in a solar panel. This effect collects solar energy throughout the day and stores it in a rechargeable gel-cell battery that can be used later in the evening when there is no sunlight.
  - Solar LED lights can be installed in many different areas. They offer amazing environmental benefits and can burnish a building owner's green credentials, serve as a unique selling point for attracting and retaining tenants and help buildings or retrofits to quality as lead points.
  - Using solar lights plays a major role in reducing the global carbon footprint that is a problem nowadays—created from non-renewable energy sources. Solar LED lights utilize a technology that is renewable which decreases the problems caused by the exhaustion of our planet's resources.
  - Whether you use yours as solar yard lights or one solar lamp in the middle of your living room, another great thing for going solar is the fact that it is an unlimited source and inexhaustible by itself. As long as you live in a place where there is sunlight, there is absolutely no reason why you can't use solar lights the entire time and produce energy out of them.
  - The biggest advantage of solar lighting is its cost. Even though they usually include a higher upfront cost, the best solar lights pay for themselves over time—best seen through the fact that they don't use any electricity but the sunlight.

Fig 4.1.4 Solar Lighting

- Solar Electricity.
  - ➔ Solar energy is radiant light and heat from the Sun that is harnessed using a range of technologies such as solar power to generate electricity, solar thermal energy (including solar water heating), and solar architecture. When sunlight strikes on photo-voltaic solar cells, solar electricity is produced. That is why this is also referred to as Photo Voltaic Solar, or PV Solar.
  - ➔ Generation of electricity by using solar energy depends on the photo voltaic effect. In photo voltaic effect, semiconductor p n junction produces electric potential when it is exposed to sunlight. For that purpose, we make n type semiconductor layer of the junction very thin. It is less than 1 µm thick. The top layer is n layer. We generally refer it as emitter of the cell.
  - ➔ The bottom layer is p type semiconductor layer and it is much thicker than top n layer. It may be more than 100 µm thick. We call this bottom layer as base of the cell. The depletion region is created at the junction of these two layers due to immobile ions.
  - ➔ When sunlight strikes on the cell, it easily reaches up to p n junction. The p n junction absorbs the photons of sunlight ray and consequently, produces electrons holes pairs in the junction. Actually, the energy associated with photon excites the valence electrons of the semiconductor atoms and hence the electrons jump to the conduction band from valence band leaving a hole behind each.
  - ➔ The free electrons, find themselves in the depletion region will easily pass to the top n layer because of attraction force positive ions in the depletion region. In the same way the holes find themselves in the depletion region will easily pass to the bottom p layer because of attraction force of negative ions in the depletion region. This phenomenon creates a charge difference between the layers and resulting to a tiny potential difference between them.
  - ➔ The unit of such combination of n type and p type semiconductor materials for producing electric potential difference in sunlight is called solar cell. Silicon is normally used as the semiconductor material for producing such solar cell.

- ➔ Conductive metal strips attached to the cells take the solar cell or photo voltaic cell is not capable of producing desired electricity instead it produces very tiny amount of electricity. Hence for extracting the desired level of electricity required numbers of such cells are connected together in both parallel and series to form a solar module or photo voltaic module. Actually, only sunlight is not the factor. The main factor is light or beam of photons to produce electricity in the solar cell.
- ➔ Hence a solar cell can also work in cloudy weather as well as in moonlight but then electricity production rate becomes law as it depends upon the intensity of incident light ray.

Fig 4.1.5 Solar Electricity

4.2 FUTURE SCOPE

Some of the main advantages of this project are:-

- ➢ Renewable Energy Source.
  - ➔ Currently, photovoltaic solar panels are roughly 15-20% efficient at converting the sun's electromagnetic radiation into the electrons it sends to the grid.
  - ➔ Solar energy is a very efficient source of green energy that is available for free. But it needs to be coupled with proper storage for best use. Also, to store it we need to use charge controlling circuitry to protect panel from reverse currents as well as to charge the battery efficiently.
  - ➔ Solar panels do not emit greenhouse gases such as carbon dioxide when they are generating electricity is without question. This is why they are beloved of many who worry about the climate-altering potential of such gases.

- ➢ Reduces Electricity Bills.

  - ➔ It's a well-known fact that the planet is suffering, and many factors are making it worse. This sadly includes the energy and electricity we use daily; however, by switching to solar power, you can reduce the amount of electricity you use and make the world a better place. You can even save money with solar power.
  - ➔ By using solar power, you'll be getting all of the energy you need from a free source. This way, you end up saving money on your electricity bills. However, this depends on your system size, how many solar devices you have, and how often you use your regular electricity and heat.

- Diverse Applications.

  - The natural world has used the sun's energy since the beginning of time and while there has been lots of discussion about this, the truth is that the sun is both a problem and a solution. Solar energy is an unchanging constant.
  - Solar energy can be used in everyday use for all purposes from boiling a pot of water to powering the lights in the house. It can be usen in water heating, generation of air inside the house, etc…
  - We are now harnessing its energy to replace traditional methods that have taken a toll on the planet. Instead of burning fossil fuels like coal and natural gases, consumers can take advantage of the infinite energy of the sun to power homes, cars and appliances.

- Low Maintenance Costs.

  - To ensure high generation and low maintenance cost, regular monitoring through data loggers is highly recommended. Typically, the maintenance costs for smaller Solar PV systems are about 2% of the initial system cost, and for larger systems is about 1% of the initial cost.
  - It is clear that solar energy offers a sustainable and low maintenance source of power, and continued research promises to deliver systems that will in the future require ever reduced levels of maintenance.
  - One of the key reasons why solar energy systems require little ongoing maintenance is because they have so few movable parts. One of the key reasons why solar energy systems require little ongoing maintenance is because they have so few movable parts.

- Technology Development.

  - The technology around solar has been evolving since its inception. It's been slow, but steady and meaningful. Take a dive into the journey of solar from 1888 until today. "Evolution is the change in characteristics of a species over several generations — which could happen over aeons or within a few centuries." – Charles Darwin
  - The solar energy industry is bouncing back after many projects were paused in 2020 during COVID-19 lockdowns. Up to 191GW of new PV capacity is expected to be installed around the world this year, up by 32.6% from 2020.
  - Several countries have already exceeded their solar capacity targets for 2021, as governments set ambitious targets for decarbonization.
  - In the UK, major companies like Octopus Energy and RES are planning to invest significantly in the development of green hydrogen production sites across the country. The aim of these sites is "to accelerate the decarbonization of industrial business". Overall, the project, and similar ones too, aims to help the UK become more independent when it comes to its energy.
  - Thin-film PV panels have continued to take a back seat to crystalline silicon, which dominates around 90% of the solar market. But US trade restrictions on imports from China – particularly with concerns about the production of polysilicon in Xinjiang – have created opportunities for thin-film producers.

4.3 LIMITATIONS

Some of the main disadvantages of this project are:-

- Cost.

  - Since solar energy depends on sunlight, it can only produce energy in the daytime. Solar panels can't produce energy at night so some systems can store energy ultimately making the system more expensive. Another method used by some solar panel systems is to use a backup from other non-renewable energy sources.
  - The huge installation cost of solar energy systems has been a major discussion for a long time now. Energy storage cost is making the already expensive solar energy systems more expensive.
  - Its cost depends on the materials used in its manufacturing and how much power it can generate. Solar cells need some rare materials like copper indium gallium selenide and cadmium telluride. This will keep the prices of solar panels high even though the installation costs have been reduced over the years. Solar panels needed to power a typical home would cost thousands of dollars which makes the power they produce more expensive than existing energy sources.

- Weather-Dependent.

  - Solar energy is far from being reliable compared to other energy sources like nuclear, fossil fuels, natural gas, etc. Since solar energy depends on sunlight, it can only produce energy in the daytime. Solar panels can't produce energy at night so some systems can store energy ultimately making the system more expensive.

  - Solar energy is fully dependant on the sun. Hence, it cannot be used in night if it is not charges and it cannot be used on cloudy days or on rainy days. It cannot be used in monsoon season or in the rainy season.

  - It is a fact, that solar energy can't be converted to power during rainy and cloudy days. We also know that solar panels are completely dependent on sunlight to function efficiently.

  - Considering these facts, it is obvious that the efficiency of solar energy systems falls considerably low on cloudy and rainy days.

- Storage Is Expensive.

  - The huge installation cost of solar energy systems has been a major discussion for a long time now. Energy storage cost is making the already expensive solar energy systems more expensive. The solar battery is a new technology just like solar panels. Its cost depends on the materials used in its manufacturing and how much power it can generate.

  - This will keep the prices of solar panels high even though the installation costs have been reduced over the years. Solar panels needed to power a typical home would

cost thousands of dollars which makes the power they produce more expensive than existing energy sources. Governments are providing heavy subsidies to bring down the cost of solar panels, but this would just add to the burden of taxpayers. Another thing to be considered is that the expensive batteries these solar panels use as a backup won't come under the warranty offered by the company.

- Requires a Lot of Space.

  - ➔ In comparison with other energy sources, solar energy utilizes a very large area for set up. Usually, rooftops are considered for solar panels the structure or shape of the house can be an issue for installation.
  - ➔ In some cases, when the rooftop area is not enough to place panels that are needed to meet the energy requirements ground-based panels are used. To generate power for big companies that consume a lot of power, they will need a very large unused area to install solar panels.

- Takes Time.

  - ➔ It takes time to charge an electronic device using solar power or energy. As the intake time of the solar power is slow from the solar panels the charging time also exceeds.
  - ➔ It also takes time to build the solar panels needed for the project.

4.4 PROBLEM SOLUTION

This project involves the development of a solar panel to generate direct current (DC) power that will be used to charge a battery. And this DC voltage from battery is converted into AC using inverter. This system will provide the basic electricity requirements for the house.

Solar power source is abundant and free which makes this system viable long-term solution for electrification.

The implementation of a project such as this will make the use of hazardous items such as kerosene lamps and car batteries redundant.

This project also helps in the implementation of solar power-based projects even if it is in small quantities. This helps in the increase of solar power-based ideas and projects.

This also helps in the reduction of generation of power and electricity using non-renewable sources which are harmful to the environment. And helps in promoting solar power-based products. This can also be implemented for large scale in the future and help in the reduction of use of non-renewable sources for production of power and electricity which are harmful to the environment and the ecosystem.

4.5 CONCLUSION

Solar energy is a very efficient source of green energy that is available for free. But it needs to be coupled with proper storage for best use. Also, to store it we need to use charge controlling circuitry to protect panel from reverse currents as well as to charge the battery efficiently.

So, we demonstrate this concept by using a mini solar panel to charge a rechargeable pencil cell battery.

Also, we use a charge control circuit designed to stop reverse current flow and charge the battery effectively using the solar panel.

Thus, this allows us to effectively provide solar battery charging with reverse current protection.

4.6 REFERENCES

- Solaris: How You Can Design, Build & Set-Up Photovoltaic Components & Solar Electric Systems – Author: Phillip Hurley
- Solar Electricity Handbook 2019 Edition: A Simple, Practical Guide To Solar Energy – Designing & Installing Solar Photovoltaic Systems – Author: Michael Boxwell
- Nevon Projects – Solar powered battery charging with reverse current protection. Available online:https://nevonprojects.com/solar-powered-battery-charging-with-reverse-current-protection/
- Hyclass Projects – Solar powered battery charging with reverse current protection. Available online:https://hyclassproject.com/solar-powered-battery-charger-with-reverse-current-protection1807.html
- C.E.Kennedy and H.Price "Progress In Development of High Temperature Solar Selective Coating", Proceedings of ISEC2005, August 6-12 2005, Orlando, Florida, USA.
- T. Miyasaka, T.N. Murakami - The photocapacitor: an efficient self-charging capacitor for direct storage of solar energy
  Appl. Phys. Lett., 85 (2004), pp. 3932-3934
- Takshi, H. Yaghoubi, T. Tevi, S. Bakhshi - Photoactive supercapacitors for solar energy harvesting and storage
  J. Power Sources, 275 (2015), pp. 621-62