IJNRD.ORG ISSN : 2456-4184
INTERNATIONAL JOURNAL OF NOVEL RESEARCH AND DEVELOPMENT (IJNRD) | IJNRD.ORG
An International Open Access, Peer-reviewed, Refereed Journal

WATER QUALITY MONITORING SYSTEM BASED ON IOT

NITHIN C, NITHIN REDDY, S. GAUTHAM, PAVAN ADITHYA V, PIYUSH KUMAR
Dept. OF ISE. , Dept. OF ISE., Dept. OF ISE., Dept. OF ISE, Dept. OF ISE.
AMC ENGINEERING COLLEGE
18th KM BANNERUGHATTA MAIN ROAD
KALKERE POST, BENGALURU – 560083
KARNATAKA, INDIA

Abstract - Water pollution has been much worse over the last few years.
One of the most crucial elements affecting health and the transmission of diseases among family members and other living things may be a person's contentment with water.
The main sources of drinking water are lakes and canals, and the quality of the water in these areas is extremely important (refers to the physical, chemical, and furthermore life components of water).
This project's objectives are to assess the water's quality, in particular how pH content changes, and to alert the relevant authorities.
The municipal water tanks and drinking water reservoirs will be where this strategy is put into action.
To do that, we're utilising an Arduino board to determine the pH level as well as various components such as sensors, microcontrollers, gateways, and cloud-based platforms.
The sensors are placed in the body of water and are in charge of determining the characteristics that which affects water quality.
The pH value of the water is finally communicated to the consumer.
We further expand our initiative by uploading monitoring of the world's water quality using sensor data on the cloud.
Index Terms - Quality water, Arduino Uno, IoT, Microcontroller, sensor

1. INTRODUCTION

All forms of life depend on water, and having access to clean, safe water is critical for both the environment and human health.
Monitoring water quality is crucial for protecting the environment and ensuring that people have access to safe and clean water for drinking.
The manual sample and analysis used in traditional water quality monitoring techniques is time-consuming, expensive, and inefficient.
This strategy may cause problems with water quality to go undetected for longer, which could have detrimental effects on human health and the environment.
Additionally, it is challenging to assess water quality over vast geographic areas since typical monitoring techniques are not scalable.
There is a requirement for an affordable, scalable, and real-time water quality monitoring system that can deliver precise and fast data on measures of water quality. These issues can be resolved by an IoT-based method for monitoring water quality makes use of the cloud and wireless sensor networks to gather, process, and distribute water quality data in real-time. This system can provide Early detection of problems with water quality enables immediate intervention. It can provide continuous monitoring of water quality indicators, including pH, dissolved oxygen, turbidity and temperature.
An overview of this paper describes the structure and working of the system which is used for the measurement of the quality of water based on IOT. The components needed for this system, the microcontroller and sensor choices, the communication setup, and the cloud-based platform will all be covered in this article. Additionally, this presentation will go through the logistical and technological difficulties linked to challenges faced during the execution of the system which is used to check the water quality based on IOT and offer remedies.[3]

A. Motivation:

Up to this point There are several systems for detecting water pollution. but each has advantages and disadvantages.
The project's main purpose is to locate contaminated areas that require supplemental scope areas in a time- and cost-effective manner. Using a wireless oxygen sensor makes it simple to implement this**.**

B. Objectives:

By identifying additional parameters such as pH, turbidity, and dissolved ions, we can further expand the quality detection. • We can also use messaging technology, which is used to send notifications to the appropriate authorities, in addition to constant monitoring.

C. Scope:

- Determining the quality of water is also one of the most important factors in controlling health and the state of diseases in people, aquatic animals, and many agricultural regions. to prolong the life of aquatic organisms.
- The purpose of this paper is to investigate parameters of personal satisfaction with water, such as pH. The material Also diffuses oxygen and water.

2. LITERATURE SURVEY

Shashank Shekhar Mishra, Ashish Kumar Sharma, and Subhrakanta Panda entitled "IoT-based Real-time Water Quality Monitoring System" This essay outlines a novel strategy for ensuring the supply of clean drinking water, which calls for real-time quality monitoring. IOT (Internet of Things) based monitoring system for periodically measuring the quality of water has been proposed. In this research, we have illustrated the architecture of the system, for measuring the quality of water based on IOT in real-time.[1]

Augustine Adewale Ankomah, Ademola Peter Adekunle "A Low-cost IoT-based Water Quality Monitoring System for Developing Countries" The paper proposes a IoT technology is used by a very low-cost water quality monitoring device, which measure various factors of water. Authors use a smartphone app to show the gathered information, and the system can be powered using solar energy, which makes it suitable for use in developing countries.[2]

Y. S. Goutham, K. V. S. Sairam, and D. V. S. R. Murthy "An IoT-based Water Quality Monitoring System for Sustainable Water Resource Management" The paper proposes an IoT-based technique for monitoring water quality that can provide sustainable water resource management. The authors use multiple sensors to measure different factors related to water quality, and the data is examined using a cloud-based platform. The system also includes a predictive model to forecast the water quality level.[3]

P. Sivaraman et al "Design and Implementation of IoT-based Water Quality Monitoring System" his work illustrates a system based on Internet of Things that uses a range of sensors to check water quality to collect data on pH, temperature, dissolved oxygen, and turbidity. After that, wirelessly transmitted data is routed to a cloud server for analysis and monitoring.[4]

R. Madhumathi and K. Ramar "An IoT Based Water Quality Monitoring System using Wireless Sensor Network" This study illustrates the use of IOT based device for the measuring of the quality of a given water sample that employs wireless sensor networks to collect data on factors which are affecting the quality of water. A smartphone application for data analysis and real-time water quality monitoring is also part of the system.[5]

3. PROBLEM STATEMENT

Monitoring water quality is crucial for protecting the environment and ensuring that people have access to safe and clean water for drinking. The manual sample and analysis used in traditional water quality monitoring techniques is time-consuming, expensive, and inefficient. This strategy may cause problems with water quality to go undetected for longer, which could have detrimental effects on human health and the environment.

Additionally, it is challenging to assess water quality over vast geographic areas since typical monitoring techniques are not scalable. A cost-efficient, scalable, and real-time water quality monitoring system that can deliver precise and fast information on water quality parameters is required to address these issues. These issues can be resolved by an IoT-based method for monitoring water quality by utilising the capabilities of wireless sensor networks and cloud computing for Real-time data collection, analysis, and dissemination of water quality. Nevertheless, choosing the right sensors, gathering and transmitting data, managing electricity, and

integrating with cloud-based platforms are just a few of the logistical and technical issues that must be resolved throughout the design and deployment of such a system.[2]

4. PROPOSED SYSTEM

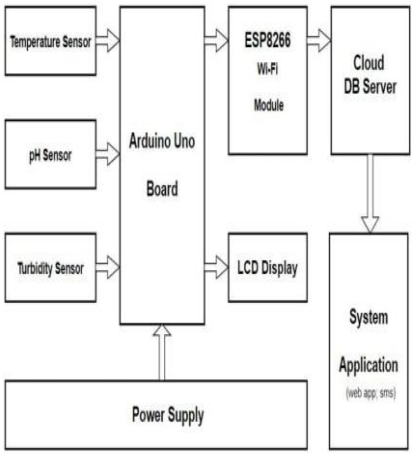

Fig.1 Block Diagram

Here, the benefits of real-time monitoring of water quality are discussed further. The general block diagram of the proposed approach is shown above. The system's components are discussed in detail. Many sensors (including those for temperature, pH, and turbidity) are linked to the central controller in the suggested block diagram. the sensor values are accessed and processed by the core controller through the internet. One of the crucial controllers is Ardunio. Using the internet's wi-fi infrastructure, the sensor data is accessible.[5]

a) Turbidity sensors: The cloudiness or haziness of a liquid or fluid is measured using a turbidity sensor. Turbidity is a metric used to determine how many suspended particles or solids there are in a fluid. The amount of light reflected or absorbed by the fluid's particles is determined by turbidity sensors. The amount of light emitted or absorbed by the fluid's particles is then measured by a detector. the sensor emits a light beam. The turbidity of the fluid directly relates to the amount of light that is dispersed or absorbed.[4]

Fig.2 Turbidity sensor

b) pH sensor: The acidity and basicity of a given solution can be determined by its pH value. The pH of a solution is measured between from 0 to 14 and its neutral point is always 7. Acidic solutions have their pH less than 7, basic solutions have their pH greater than 7. pH sensor can easily be integrated into an Arduino uno board which runs on a 5V supply. The pH of pure water is exactly 7.[5]

Fig.3 pH sensor

c) Temperature sensor: You can determine how hot or cold the water is by checking its temperature. The temperature range of the DS18B20 temperature sensor is -55 to +125 °C. The measurements from this digital

temperature sensor are accurate.[3]

Fig. 4 Temperature sensor

d) Arduino Uno: Based on the ATmega328P, the Arduino microcontroller board is used. A 16 MHz is present. quartz crystal, a USB port, a power jack, an ICSP header, a reset button, 6 analogue inputs, 14 digital input/output pins, 6 of which have PWM output capabilities. Everything requisites for supporting the microcontroller is present. Previous releases of the Arduino Software have taken the place of more recent iterations (IDE). [3]

Fig. 5 Arduino Uno

e) Wi-Fi Module: The microcontroller on Arduino uno can connect to a Wireless-Fidelity network using the ESP8266 Wireless-Fidelity Module, an independent SOC with a built-in TCP/IP protocol. The ESP8266 is used to connect the Arduino uno board to connect to Wireless-Fidelity network using IEEE 802.11bgn and hosting or assigning another application processor to handle all Wi-Fi networking tasks. An ATtention command set software is pre-installed into it [1]

Fig. 6 Wi-Fi module

5. CIRCUIT DIAGRAM

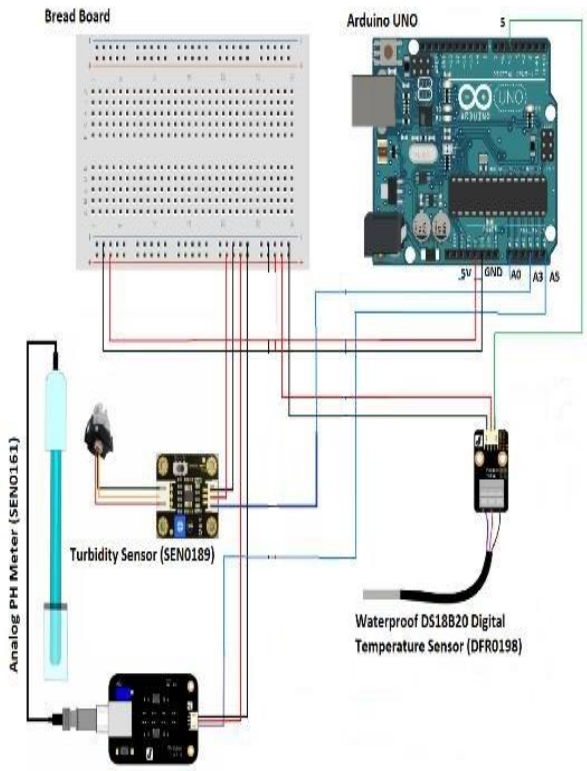

6. CONCLUSION

In this paper, we discuss the latest technology that can help to Early detection of contaminants: IoT-based water quality monitoring systems can detect contaminants in water at an early stage, before they can become a major health hazard. This can help prevent outbreaks of waterborne diseases and reduce the risk of contamination in the water supply.

7. FUTURE WORK

Detecting the more parameter for most secure purpose. Increase the parameter by adding of multiple sensors. By interfacing relay, we control the supply of water.

remote monitoring of water quality, allowing water utilities to monitor their water supply from anywhere in the world. This can help reduce costs associated with on-site monitoring while still ensuring water quality and safety.

8. ACKNOWLEDGMENT

We are pleased to share the project report for the system that will use the internet of things to detect water quality. We want to express our sincere appreciation to Dr. NIRMALA, Head of the Department of Computer Science (Artificial Intelligence and Machine Learning) Engineering, for providing the necessary information and resources, helping us conceptualise the work, and consistently inspiring us to finish this project work on the "IoT Based Water Quality Monitoring System." Our principal, Dr. GIRISHA.C, has always supported and encouraged us, and we genuinely appreciate that.

REFERENCES

[1] “IoT-based Real-time Water Quality Monitoring System” by Shashank Shekhar Mishra, Ashish Kumar Sharma, and Subhrakanta Panda ,2017

[2] “A Low-cost IoT-based Water Quality Monitoring System” by Augustine Adewale Ankomah, Ademola Peter Adekunle, and Babajide Samuel Lawal ,2019

[3] “An IoT-based Water Quality Monitoring System for Sustainable Water Resource Management” by Y. S. Goutham, K. V. S. S. S. Sairam, and D. V. S. S. S. R. Murthy,2020

[4] “Design and Implementation of IoT-based Water Quality Monitoring System" by P. Sivaraman et al, 2020

[5] "An IoT Based Water Quality Monitoring System using Wireless Sensor Network" by R. Madhumathi and K. Ramar,2021