IJNRD.ORG ISSN : 2456-4184
INTERNATIONAL JOURNAL OF NOVEL RESEARCH AND DEVELOPMENT (IJNRD) | IJNRD.ORG
An International Open Access, Peer-reviewed, Refereed Journal

Design and Implementation of Sensorless Bi-directional Control System for DC Motors with Half H-Bridge Driver and Short Circuit Protection

Achraj Swami

***Abstract*— This project focuses on the design and simulation of a DC motor bi-directional control system without the need for position sensing. Traditional control systems for DC motors typically rely on position sensors to provide feedback for precise control, which adds complexity and cost to the system. In this project, we propose a sensorless control system that utilizes a potentiometer for controlling the speed and direction of the motor, along with a half H-bridge driver for power control.**

The control system consists of a microcontroller, a half H-bridge driver, and a potentiometer. The microcontroller generates pulse width modulation (PWM) signals to control the motor's speed and direction based on the input from the potentiometer. The half H-bridge driver allows bi-directional control of the motor, enabling both clockwise and counterclockwise rotation.

One crucial aspect of the control system is the incorporation of high amperage or short circuit protection in both directions. This protection mechanism ensures the safety and reliability of the system during operation. It prevents excessive current flow or short circuits that may occur due to sudden changes in motor load or other unforeseen circumstances.

To evaluate the performance of the proposed control system, a simulation environment using software tools such as Arduino Uno IDE or Fritizng is created. The simulation enables comprehensive testing under various operating conditions and provides insights into the system's behavior, including the effectiveness of the high amperage or short circuit protection.

The results of the simulation demonstrate the effectiveness of the sensorless control system in accurately controlling the DC motor's speed and direction while ensuring high amperage or short circuit protection. The system achieves reliable operation by utilizing the potentiometer as a user-controlled input and the half H-bridge driver for power control. This research contributes to the advancement of sensorless control techniques for DC motors, offering a cost-effective and simplified solution with enhanced safety features for various applications.

***Index Terms*— DC motor control, sensorless control, bi-directional control, potentiometer, half H-bridge driver, pulse width modulation (PWM), high amperage protection, short circuit protection, simulation, cost-effective solution.**

I. Introduction

DC motors are widely used in various applications, ranging from robotics to industrial automation, due to their simplicity, reliability, and ease of control. Traditional control systems for DC motors often rely on position sensors to provide feedback for precise control, but the inclusion of such sensors increases system complexity and cost. Therefore, there is a growing interest in developing sensorless control techniques that eliminate the need for position sensing devices.

In this project, we propose a sensorless bi-directional control system for DC motors that does not require position sensing. Instead, we utilize a potentiometer as a user-adjustable input for controlling the speed and direction of the motor. By varying the resistance of the potentiometer, the microcontroller generates pulse width modulation (PWM) signals to adjust the motor's speed and direction accordingly. This approach simplifies the control system and reduces costs by eliminating the need for additional sensors.

Furthermore, we incorporate a half H-bridge driver into the system to provide power control for the motor. The half H-bridge driver allows for bi-directional control, enabling both clockwise and counterclockwise rotation of the motor. Additionally, we address the importance of including high amperage protection and short circuit protection in both directions to ensure the safety and reliability of the control system during operation.

The results of our simulation demonstrate the effectiveness of the sensorless control system in accurately controlling the speed and direction of the DC motor. The system achieves reliable operation without the need for position sensors, offering a cost-effective and simplified solution. Moreover, the incorporation of high amperage protection and short circuit protection ensures the safety and durability of the control system.

II. MATHEMATICAL MODELING OF PERMANENT MAGNET BRUSH DC MOTOR

A DC Motor whose poles are made of Permanent Magnets is known as Permanent Magnet DC (PMDC) Motor. The magnets are radially magnetized and are mounted on the inner periphery of the cylindrical steel stator. The stator of the motor serves as a return path for the magnetic flux. The rotor has a DC armature, with commutator segments and brushes. The cross-sectional view of the 2 pole PMDC motor is shown in Figure 1 below;

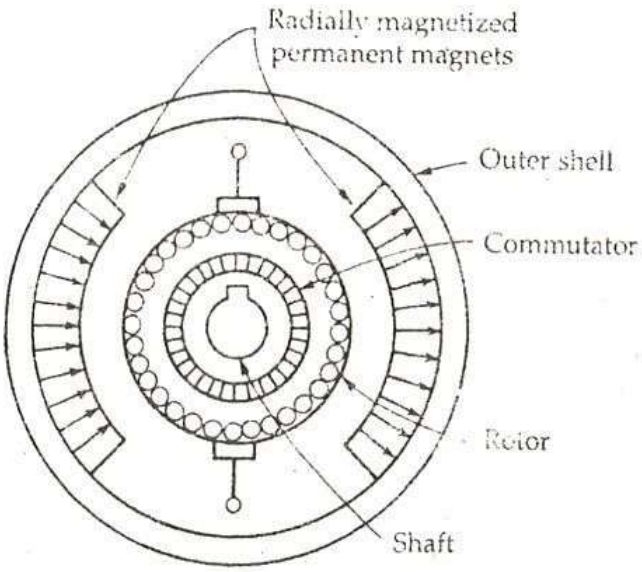

Figure 1: The Cross-Sectional View Of The 2 Pole PMDC Motor

The Permanent Magnet DC motor generally operates on 6 Volts, 12 Volts or 24 Volts DC supply obtained from the batteries or rectifiers. The interaction between the axial current carrying rotor conductors and the magnetic flux produced by the permanent magnet results in the generation of the torque. [1]

A. CIRCUIT DIAGRAM

The circuit diagram of the PMDC is shown in Figure 2;

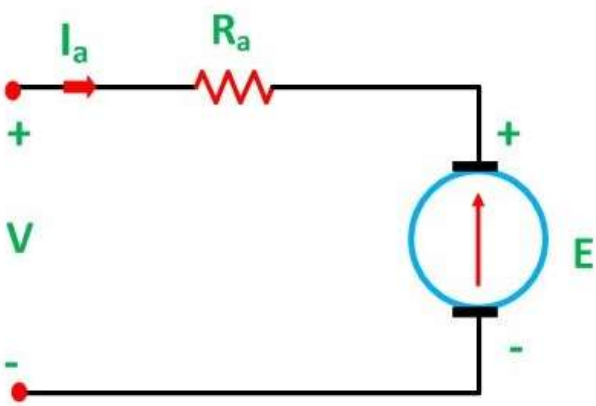

Figure 2: The Circuit Diagram Of The PMDC Motor

B. EQUATIONS

In conventional DC motor, the generated or back EMF is given by the equation mentioned below; [1]

$$E = k\varphi N \quad (1)$$

The electromagnetic torque is given as [1]

$$\tau_e = k\varphi I_a \quad (2)$$

In Permanent Magnet DC motor, the value of flux ϕ is constant. Therefore, the above equation (1) and (2) becomes [1]

$$E = k_1 N \quad (3)$$

$$\tau_e = k_1 I_a \quad (4)$$

Considering the circuit diagram shown in Figure 2, the equations (3) and (4) are expressed as [1];

$$V_a = E + I_a R_a \quad (5)$$

Putting the value of E from the equation (3) in equation (5) we get [1]

$$V_a = k_1 N + I_a R_a$$

or

$$N = \frac{V_a - I_a R_a}{k_1} \quad (6)$$

Where $k_1 = k\phi$ and is known as speed-voltage constant or torque constant. Its value depends upon the number of field poles and armature conductors.

Taking time average values, for steady state operation, results in;

$$e = k_1 . E . \omega . \phi \quad (7)$$

The motor speed can be easily derived from (7) as;

$$\omega = \frac{V_a - I_a R_a}{k_1 \phi} \quad (8)$$

If R_a is a small value (which is usual), or when the motor is lightly loaded, i.e., I_a is small,

$$\omega = \frac{V_a}{k_1 \phi} \quad (9)$$

That is if the field current is kept constant, the speed of motor depends on the supply voltage. These observation leads to the application of variable DC voltage to control the speed and torque of DC motor.

The speed control of the PMDC motor cannot be controlled by using flux control method as the flux remains constant in this type of motor. Both speed and torque can be controlled by armature voltage control, armature rheostat control, and chopper control methods. These motors are used where the motor speed below the base speed is required as they cannot be operated above the base speed.

C. PWM TECHNIQUE

Generally, DC motors direction of rotation and speed are controlled with using PWM signals. By means of PWM signals applied voltage to DC motor windings can be changed. This changing is seen as a speed on the motor. The voltage increasing causes the speed increasing.

In many applications simple voltage regulation would cause a lot of power loss in control circuit, so Pulse Width Modulation (PWM) is used in many DC motor controlling application. The rapid rising and falling edges ensure that the semiconductor power devices are turned on or turned off as fast as practically possible to minimize the switching transition time and the associated switching losses.[11]

The average value of voltage fed to the load is controlled by turning the switch between supply and load ON and OFF at a fast pace. The longer the switch is ON compared to the OFF periods, the higher the power supplied to the load is.

The term duty cycle describes the proportion of ON time to the regular interval or period of time, a low duty cycle corresponds to low power, because the power is OFF for most of the time. Duty cycle is expressed in percent 100% being fully ON. Figure 3 illustrates the PWM signal logic. This "on" time is referred to as the "duty cycle" and is stated as a percentage, calculated as:

$$Duty\ Cycle\ (\%) = \frac{Ontime}{Period \times 100} \quad (10)$$

Figure 3 shows a duty cycle of 25%, 50%, and 75% with the resulting average perceived voltage of these PWM signals equal to different voltage levels. The frequency of the PWM drive signal is calculated by taking the reciprocal of the period:[11]

$$PWM\ Frequency = \frac{1}{Period} \quad (11)$$

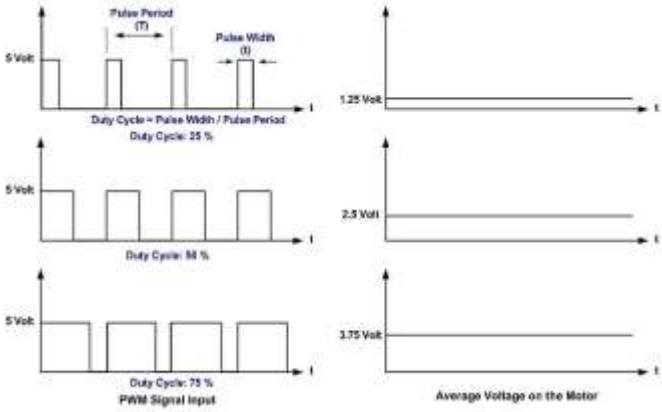

Figure 3: PWM Signals

III. BI-DIRECTIONAL CONTROL OF DC MOTOR

A. WHAT IS HALF H-BRIDGE INVERTER?

Half H-bridge is one of the inverter topologies which convert DC into AC. The typical Half-bridge circuit consists of two control switches, 3 wire DC supply, two feedback diodes, and two capacitors connecting the load with the source. Control switch can be any electronic switch i.e., MOSFET, BJT, IJBT, or thyristor, etc. [2]

The circuit is designed in such a way that both switches must not turn-on at a single time & only one of the two switches will conduct. Each switch will operate for half period (T/2), providing half of the applied voltage the load (± $V_{dc}/2$). When both the switches are off, the reserved voltage across the load will be Vdc instead of $V_{dc}/2$. This is called a half-bridge inverter. [2]

For 'forward' rotation Q1 and Q4 are switched on while Q2 and Q3 are off. For 'reverse' rotation Q2 and Q3 are on while Q1 and Q4 are off. Some of the conventions in the given circuit are such that;

- Current through S_1 is i_1, while the current flowing through S_2 is i_2.
- Output voltage and current are V_o and i_o
- T is the time period and switches are considered unidirectional.

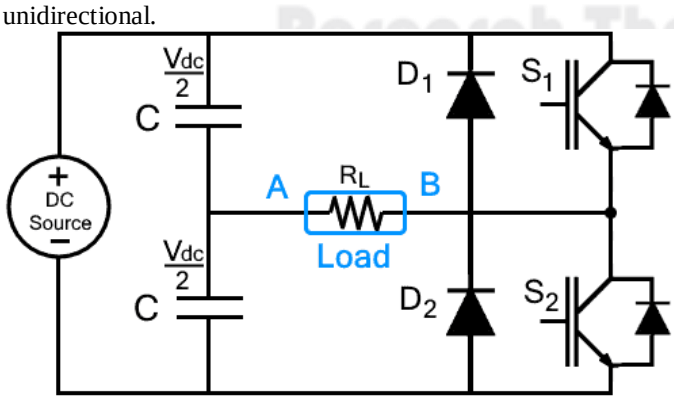

Figure 4: Typical Half Bridge Inverter

B. OPERATION OF HALF H-BRIDGE INVERTER WITH R LOAD

The operation of half-bridge with pure resistive load is the simplest. A purely resistive load does not have any storage component, so the circuit doesn't need feedback diodes. The circuit with this load will be operated in just two modes;

Mode 1: (0<t<T/2)

In this mode, S_1 is turned-on from time interval t=0 to t=T/2 while S_2 is turned off. As soon as S_1 is turned on, the voltage across the load will appear. The output voltage across the load will be;

$$V_o = \frac{V_{dc}}{2} \quad (12)$$

The current flowing through the switch S_1 will be;

$$I_o = \frac{V_{dc}}{2R_L}, \quad (13)$$

Where R_L is the load resistance. The current flow in clockwise direction as shown in the Figure 5.

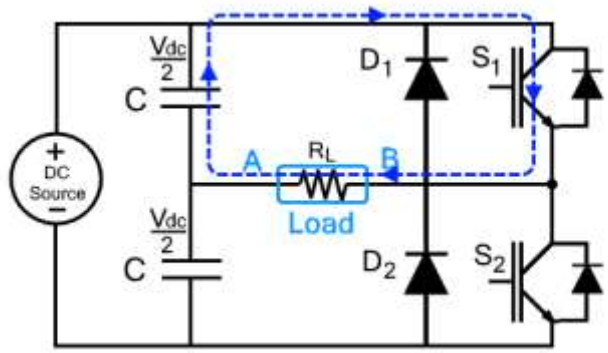

Figure 5: Mode 1 For R-Load

Mode 2: (T/2<t<T)

In this mode, switch S_2 is turned on from the time interval t=T/2 to t=T while S_1 is switched off. Immediate switching of modes is avoided because it causes a short circuit. Due to this reason, S_2 is turned-on with some delay after S_1 is completely turned off. In this case, the output voltage will be negative as the current enters in the load from the opposite direction where output voltage will be;

$$V_o = \frac{-V_{dc}}{2} \quad (14)$$

The current through S_2 will be;

$$I_o = \frac{V_{dc}}{2R_L} \quad (13)$$

The current flows in the reverse direction through the load as shown in the Figure 6. Hence it shows that the half H-bridge has converted the applied DC into AC. [2]

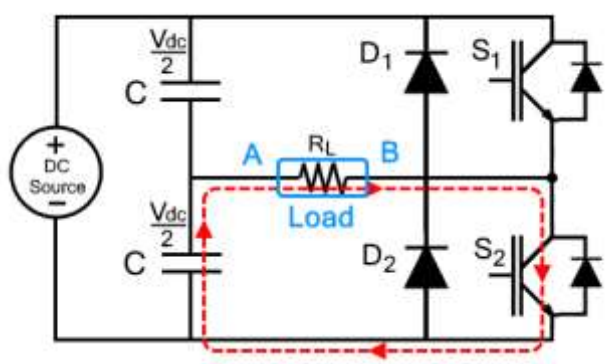

Figure 6: Mode 2 For R-Load

IV. DC MOTOR CONTROL SYSTEM

A. BLOCK DIGRAM

DC Motor control system includes DC Power Supply, AURDINO UNO REV 3, L239D Half-H Bridge, DC MOTOR, LCD Screen. System block diagram is given at Figure 7.

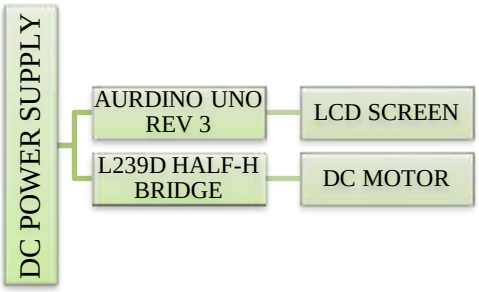

Figure 7: DC Motor Control System Block Diagram

B. DISCRIPTION & SCHEMATICS OF DC MOTOR CONTROL SYSTEM

In the current setup AC power is supplied to SMPS to give output current up to 10A at 12V, the output positive polarity of SMPS (+Vdc) is connected to L293D (IC) at V+ motor pin and the output negative polarity is connected to common ground, both terminals of motor are connected to output pins of IC via ACS712 (current sensor) in series, input pins of IC are connected to PWM output pins (3) & (6) of Arduino Uno Rev 3 (microcontroller) to receive PWM signals from microcontroller. Enable pin of IC is connected to pin 13 of microcontroller to receive enable signal during start of motor operation, potentiometer output is connected to Analog Pin A1 of microcontroller to read input from it and this input is taken as reference to control speed and direction of motor, current sensor output is connected to A0 pin of microcontroller to constantly monitor armature current and thereon to protect the motor winding from shot circuit, and thereby enable high amperage protection. The circuit diagram of complete system is created using "FRITZING" is shown in Figure 8;

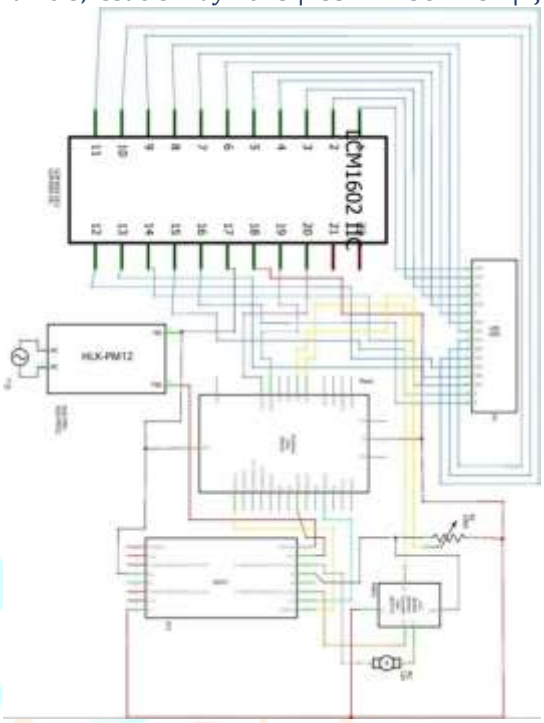

Figure 8: Circuit Diagram of complete system

V. MICROCONTROLLER ALGORITHM

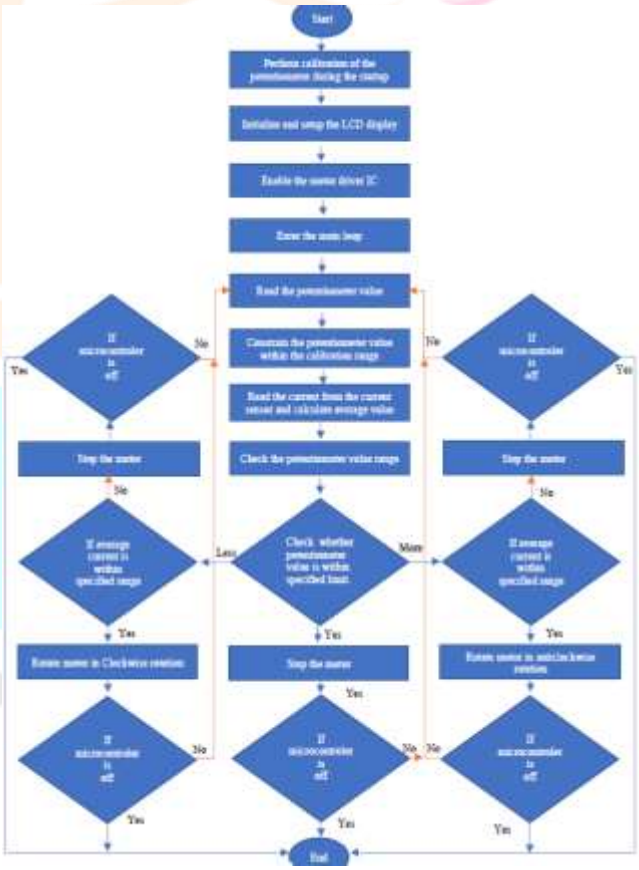

Figure 9: Flow Chart of Algorithm

The above algorithm process is exactly same for left and right conditions, therefore explaining only right side is enough to understand to complete flow algorithm. The algorithm starts with initializing LCD, motor control pins, and I2C communication afterwards it starts reading potentiometer value

and starts continuous comparison of potentiometer value against the specified ranges, If the potentiometer value is below the CCW threshold then it displays "MODE: CCW" on the LCD and simultaneously set motor control pins to rotate the motor in the counter-clockwise direction o if the potentiometer value is within the STOP range, then algorithm display "MODE: STOP" on the LCD and set motor control pins to stop the motor then the loop keeps on rotating till microcontroller power is on.

VI. RESULT AND DISCUSSION

The proposed control system is driving 360 Watts motor at 12V. The simulated results of control system are shown in figure 10. When DC motor is rotating in CCW direction with the increment in potentiometer value the increase in current is also can be seen from Figure 10 as the potentiometer value is decreasing, we can we see the decrease in current consumption till 525 level of potentiometer once the potentiometer level decreases below 500 the current consumption will start increasing with negative sign denoting CW rotation of motor. The remaining figures is showing the simulation result at different Pot values.

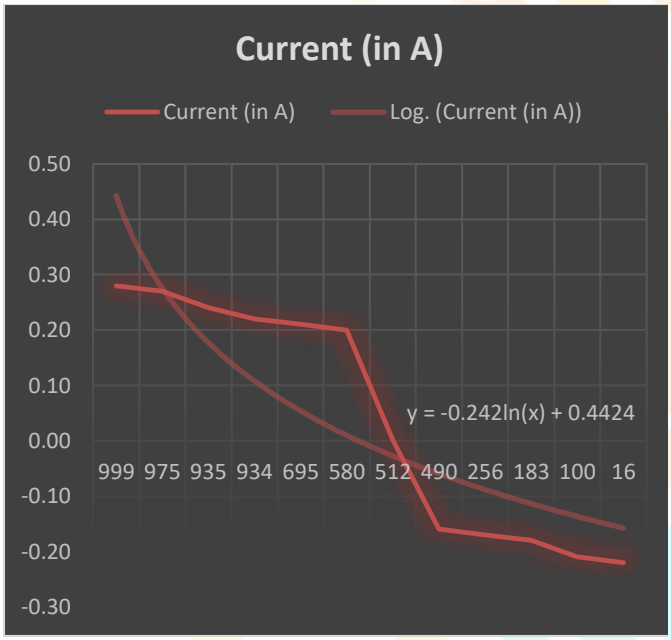

Figure 10: Motor Bi-Directional Current Consumption as A Function Of Potentiometer Increment

VII. FUTURE SCOPE

- Integration with a Microcontroller Platform: The current implementation of the sensorless bi-directional control system utilizes the Arduino Uno Rev 3 as the microcontroller. In the future, the system can be extended to support other microcontroller platforms, providing flexibility and compatibility with a wider range of development boards.
- Enhanced Speed and Direction Control: The existing system uses a potentiometer to control the speed and direction of the brush DC motor. In the future, more advanced control algorithms, such as PID control, can be implemented to achieve smoother and more precise speed and direction control. This can improve the overall performance and responsiveness of the system.
- Sensor Integration for Feedback: While the current system operates in a sensorless manner, the addition of sensors, such as encoders or Hall effect sensors, can provide valuable feedback for accurate motor control. Incorporating sensor feedback can enhance the system's ability to maintain speed, detect position, and handle dynamic loads.
- Remote Monitoring and Control: Implementing wireless communication capabilities, such as Bluetooth or Wi-Fi, would allow remote monitoring and control of the motor system. This could enable users to adjust speed and direction parameters, monitor motor performance, and receive real-time notifications or alerts through a mobile application or web interface.
- Safety and Fault Detection Mechanisms: Enhancing the system with advanced safety features and fault detection mechanisms can improve reliability and protect the motor and driver components. This could include features such as short-circuit protection, overcurrent protection, and temperature monitoring to prevent damage and ensure safe operation.
- Expandability for Multiple Motors: The current system controls a single brush DC motor. To accommodate applications requiring control of multiple motors, the system can be expanded to support multiple motor driver circuits and provide coordinated control for simultaneous operation of multiple motors.
- Energy Efficiency and Power Management: Incorporating energy-efficient algorithms and power management techniques can optimize power consumption and extend battery life in battery-operated applications. This could involve implementing sleep modes, intelligent power management, and energy-saving control strategies to maximize efficiency.
- Real-time Data Logging and Analytics: Integrating data logging capabilities and analytics algorithms can enable the system to record and analyze motor performance data in real-time. This information can be utilized for performance optimization, predictive maintenance, and system diagnostics, leading to improved efficiency and reliability.
- Application-Specific Customization: The system can be further customized and tailored to specific application requirements. By understanding the target application's unique needs, additional features, interfaces, or control modes can be developed to enhance its functionality and usability in specific domains such as robotics, automation, or electric vehicle systems.
- Documentation and Knowledge Sharing: Documenting the design, implementation, and findings of the project can contribute to the knowledge base in the field of motor control systems. Sharing the project details, including circuit diagrams, code, and implementation steps, through open-source platforms or technical publications can help other researchers and enthusiasts in their endeavors and foster collaborative learning and innovation.
- By pursuing these future enhancements and explorations, the design and simulation of the sensorless bi-directional control system for DC motors can be further developed, refined, and adapted to various applications, expanding its

capabilities and impact in the field of motor control.

VIII. Conclusion

In conclusion, this project aimed to design and simulate a sensorless bi-directional control system for 360 Watts DC motors using a potentiometer as reference to control the speed and direction. The system utilizes a half H-bridge driver for power control, while an Arduino Uno Rev 3 microcontroller serves as the control unit. Additionally, the control system incorporates short circuit and high amperage protection mechanisms to ensure the safety and reliability of the system.

Through the design and simulation process, we successfully demonstrated the effectiveness of the proposed control system. The potentiometer, acting as a user-adjustable input, allows for intuitive control of the motor's speed and direction. The Arduino Uno Rev 3 microcontroller generates pulse width modulation (PWM) signals based on the potentiometer's value to adjust the motor's behavior accordingly. Our proposed system is working currently at 12V supply to drive motor at a restricted current of 280mA, this system is also able to operate a motor at 36V and 600mA. The inclusion of the half H-bridge driver enables bi-directional control, allowing the motor to rotate in both clockwise and counterclockwise directions. This enhances the versatility of the system, making it suitable for various applications where bi-directional control is required.

Moreover, the integration of short circuit and high amperage protection mechanisms ensures the system's safety and prevents potential damage caused by excessive current flow or short circuits. In our case the control system detects whether the motor consumes current more than 400mA via current sensor then it shut the supply to the motor. This feature adds an extra layer of protection and reliability to the control system, safeguarding both the motor and the overall circuit.

By conducting thorough simulations, we assessed the performance of the sensorless control system under various operating conditions. The results demonstrated the system's ability to accurately control the speed and direction of the brush DC motor. The system responded effectively to changes in the potentiometer's value, allowing for real-time adjustments in motor behavior.

Overall, this project contributes to the field of sensorless control systems for DC motors by presenting a design and simulation of a bi-directional control system that utilizes a potentiometer, Arduino Uno Rev 3 microcontroller, and half H-bridge driver. The incorporation of short circuit and high amperage protection ensures the system's safety and reliability. The developed control system offers a practical and efficient solution for controlling brush DC motors, opening doors for various applications in robotics, automation, and beyond.

IX. References

[1] https://circuitglobe.com/permanent-magnet-dc-motor.html

[2] https://www.electricaltechnology.org/2020/06/half-h-bridge-inverter-its-modes-of-operation-with-waveforms.

[3] https://forum.arduino.cc/c/community/9

[4] Wikipedia

[5] Vibhor Gupta, "Working and Analysis of the H – Bridge Motor Driver Circuit Designed for Wheeled Mobile Robots, Advanced Computer Control (ICACC), 2010 2nd International Conference, 27-29 March 2010, Shenyang, China

[6] Snehlata Sanjay Thakare1, Prof.Santosh Kompelli, "Design and implementation of dc motor speed control based on PIC microcontroller", International Journal Of Engineering And Computer Science ISSN:2319-7242 Volume - 3 Issue -9 September, 2014 Page No. 8075-8079

[7] Jamal A. Mohammed, "PulseWidth Modulation for DC Motor Control Based on LM324", Eng. &Tech. Journal, Vol. 31,Part (A), No.10, 2013, 1882-1896

[8] J. Nicolai and T. Castagnel, "A Flexible Microcontroller Based Chopper Driving a Permanent Magnet DC Motor," The European Power Electronics Application. 1993.

[9] Mike Rylee, Low-Cost Bidirectional Brushed DC Motor Control Using the PIC16F684, Microchip Technology Inc., AN 893, 2003

[10] Karthick,R. PC Based Speed Controlling of a DC Motor, Report, Circuit Ideas, Electronics for you, June 2004, pp. 67.

[11] Tolga Özer Afyon Kocatepe University "H Bridge DC Motor Driver Design and Implementation with Using dsPIC30f4011" IJIRSET, ISSN(Online): 2319-8753, ISSN (Print): 2347-6710.