A Comparative Analysis of 3D Printed Fasteners: Methodological Evaluation of M6 and M12 Bolts and Nuts

1st S. Thamizh Selvan, 2nd L.S.Tamizh Selvan, 3rd E. Shivani, 3rd S. J. Naveena,
[1,2] Assistant Professor, [3,4] Student
[1,2,3,4] Department of Mechanical Engineering,
[1,3,4] Sri Venkateswara College of Engineering, Chennai
2 Rajalakshmi Engineering College, Chennai.
thamizh1899@gmail.com,

Abstract
The rise of 3D printing technology has revolutionized the process of manufacturing customized mechanical parts by changing the concept of manufacturing from centralized large-scale manufacturing to localized and demand-based manufacturing. Bolts and nuts are very common mechanical fastening devices. Their manufacture through 3D printing technology is very difficult due to issues of dimensions and load-bearing capacity. In this article, there is a full methodology that has been provided to measure the feasibility of printing standardized threads through 3D printing. In this paper, a comparison has been made between M6 and M12 bolts and nuts through the study of the feasibility of 3D printing. This study helps in understanding the effects of scaling Fused Deposition Modeling (FDM) on the accuracy of thread cutting and the mechanical strength of the threads.

Keywords: Additive Manufacturing, Polylactic Acid, Fused Deposition Modeling, ANSYS

Introduction

The rapid development of additive manufacturing (AM) technology has introduced considerable flexibility into modern manufacturing systems by enabling the fabrication of complex geometries directly from three-dimensional (3D) digital models. Unlike conventional subtractive manufacturing processes, additive manufacturing produces components through successive material deposition, reducing material wastage and providing greater design flexibility (Gibson et al., 2015; Gao et al., 2015). This transition from physical inventory systems towards digital manufacturing and distributed production has the potential to transform supply chain strategies by allowing components to be fabricated on demand at the point of application (Nyman & Sarlin, 2014). Among the essential components used in mechanical assemblies, threaded fasteners, particularly bolts and nuts, play a significant role in transmitting loads and maintaining structural integrity. Therefore, the ability to manufacture functional threaded fasteners using 3D printing offers considerable opportunities for rapid prototyping, customized component production, equipment maintenance, and emergency field repairs.
Fused deposition modelling (FDM), also referred to as fused filament fabrication (FFF), is one of the widely adopted additive manufacturing techniques because of its relatively low equipment cost, simple operation, and compatibility with thermoplastic materials. In this process, a thermoplastic filament is heated and deposited through a nozzle to construct the component layer by layer. However, the mechanical performance and dimensional accuracy of FDM-printed components are strongly influenced by process parameters, including layer thickness, printing speed, nozzle temperature, infill density, raster orientation, and build orientation (Turner et al., 2014; Popescu et al., 2018). Syrlybayev et al. (2021) reviewed the optimization of strength properties in FDM-printed components and identified dimensional accuracy, interlayer bonding, and mechanical strength as important considerations for functional applications. Similarly, Cojocaru et al. (2022) discussed the influence of printing parameters on the tensile, compressive, and flexural properties of PLA components. Medibew (2022) further highlighted the importance of process parameter optimization for improving the tensile strength of FDM-printed PLA components.

Despite these developments, the fabrication of reliable threaded fasteners using FDM remains challenging because of the geometric limitations associated with layer-by-layer material deposition. Threaded components require accurate control of pitch diameter, minor diameter, major diameter, thread pitch, and thread depth to ensure proper engagement between mating components. Tronvoll et al. (2018) experimentally investigated the dimensional accuracy of threads manufactured using FDM and reported deviations in radial tolerances and distortions in the printed thread profiles. Their investigation demonstrated that reducing layer thickness could improve thread geometry, although dimensional deviations remained even under finer layer conditions. Similarly, Chand et al. (2022) investigated the dimensional and mechanical characteristics of 3D-printed nuts and bolts and demonstrated that manufacturing position could influence dimensional consistency and mechanical performance. More recently, Sarzyński et al. (2024) evaluated the geometrical accuracy and surface quality of threaded and spline connections produced using material extrusion, material jetting, and vat photopolymerization technologies. Their findings indicated that the dimensional accuracy of threaded components varied according to the manufacturing technology employed.

The geometric representation and toolpath-generation process also influence the quality of additively manufactured components. Conventional 3D-printing workflows generally depend on polygonal mesh representations, which may contain geometric and topological inconsistencies, including non-manifold edges, intersecting surfaces, and defective mesh regions. Such inaccuracies can affect the subsequent slicing and toolpath-generation stages. Hong et al. (2026) introduced PrintAnything, a learning-based framework that generates executable G-code directly from point-cloud representations without requiring intermediate mesh reconstruction. This approach highlights emerging developments in geometric representation and toolpath generation for additive manufacturing. For threaded fasteners, accurate digital representation is particularly important because even minor geometric deviations can affect thread continuity, dimensional precision, and assembly compatibility.

In parallel, the mechanical properties of FDM-printed PLA components have received considerable attention. Algarni (2021) investigated the influence of raster angle and moisture content on the mechanical behaviour of FDM-printed PLA specimens, demonstrating the importance of material condition and deposition orientation. Tan et al. (2021) examined the effects of infill density and raster angle on the mechanical properties of PLA components. Gajjar et al. (2025) investigated the effects of layer thickness, raster angle, feed rate, and nozzle temperature on the tensile properties and interlayer bonding behaviour of FFF-printed PLA. Their findings demonstrated that changes in printing conditions significantly influenced tensile strength, surface quality, and interlayer bonding. Similarly, Chansamai et al. (2023) evaluated the influence of raster and layer characteristics on the tensile behaviour and failure mechanisms of FFF-printed PLA specimens. Jayakumar et al. (2026) also investigated the dimensional accuracy, geometric deviations, and surface roughness of FDM-printed PLA components using a Taguchi optimization approach. These studies establish that the selection of appropriate printing parameters is essential for achieving consistent dimensional and mechanical performance.

Although previous investigations have addressed the dimensional accuracy and mechanical behaviour of additively manufactured threaded components, a systematic comparison of different standardized metric fastener sizes under identical FDM printing conditions remains an important research area. In particular, smaller fasteners such as M6 possess a nominal diameter of 6 mm and a standard coarse thread pitch of 1.0 mm, whereas M12 fasteners have a nominal diameter of 12 mm and a coarse thread pitch of 1.75 mm. The smaller thread geometry of M6 fasteners presents additional challenges in reproducing the thread profile, maintaining dimensional tolerances, and achieving reliable mechanical engagement. In comparison, M12 fasteners provide larger thread dimensions, potentially allowing more consistent material deposition and improved geometric reproduction. Miwa et al. (2026) also investigated the mechanical and dimensional characteristics of 3D-printed threaded fasteners, highlighting the influence of infill percentage, wall configuration, material selection, and filament height on mechanical capacity and thread geometry. These findings reinforce the need to investigate the influence of geometric dimensions and printing conditions on the performance of additively manufactured fasteners.

In this context, the present study investigates the comparative fabrication and mechanical performance of FDM-printed M6 and M12 threaded fasteners using polylactic acid (PLA) material. Both fastener sizes are fabricated using identical toolpath-generation strategies and controlled printing conditions to evaluate the influence of geometric scaling on dimensional accuracy and mechanical behaviour. The investigation focuses on thread dimensional deviations, including pitch diameter and other relevant geometric characteristics, together with ultimate tensile load under mechanical testing. The experimental comparison aims to identify the limitations associated with manufacturing fine-threaded components and determine the relative performance of smaller and larger metric fasteners. The findings are expected to provide an experimental assessment framework for dimensional optimization, mechanical reliability, and quality assurance of polymer-based additively manufactured threaded fasteners.

Method/Approach

In order to systematically evaluate and compare the performances of the 3D printed M6 and M12 bolts and nuts, propose a systematic methodology approach consisting of four major parts. In the first part, called Model Acquisition, standardized CAD designs for the M6 (with 1 mm thread pitch) and M12 (with 1.75 mm thread pitch) fasteners are developed according to the ISO standards. The second module is Slicing and Parameter Optimization, which involves configuring the printer for optimized thread generation. The third module is Fabrication using traditional FDM technology. The fourth module is Mechanical Testing of the 3D printed samples. The last step of the proposed model will be mechanical testing in which the created samples are subjected to dimensional check and tensile test to verify the geometrical accuracy and mechanical properties of the samples.

Table 1 : Specification of M6 and M12 Bolt and Niut

Parameter / Feature	**M6 Specification**	**M12 Specification**
Nominal (Major) Diameter (d)	6.00 mm	12.00 mm
Thread Pitch (P)	1.00 mm	1.75 mm
Bolt Pitch Diameter (d2)	5.350 mm	10.863 mm
Bolt Minor (Core) Diameter (d3)	4.773 mm	9.858 mm
Thread Depth (h3)	0.613 mm	1.074 mm
Nut Minor Diameter (D1)	4.917 mm	9.858 mm
Bolt Head Height (k)	4.00 mm	9.00 mm
Width Across Flats / Spanner Size (s)	10.00 mm	18.00 mm
Inscribed Circle Head Diameter	10.00 mm	24.00 mm
Standard Thread Length (b) (L≤125 mm)	18.00 mm	30.00 mm
Clearance Hole (ISO 273 Medium)	Ø6.60 mm	Ø13.50 mm

Material and slicing parameters have a great effect on the quality and reliability of printed parts. In this experiment, PLA was chosen as the reference material due to its common usage in FDM and good printability, especially because of its low warping propensity. The layer thickness of 0.1 mm was set to meet the necessary dimensional requirements. This particular parameter was chosen with a purpose of achieving exact replication of 1 mm thread pitch of the M6 screw, thus ensuring geometrical accuracy of the printed thread elements.

Material and slicing parameters have a great effect on the quality and reliability of printed parts. In this experiment, PLA was chosen as the reference material due to its common usage in FDM and good printability, especially because of its low warping propensity. The layer thickness of 0.1 mm was set to meet the necessary

dimensional requirements. This particular parameter was chosen with a purpose of achieving exact replication of 1 mm thread pitch of the M6 screw, thus ensuring geometrical accuracy of the printed thread elements.



Figure 1: Fabrication element of M6 and M12 Bolt and Nut using PLA Element

Material and slicing parameters have a great effect on the quality and reliability of printed parts. In this experiment, PLA was chosen as the reference material due to its common usage in FDM and good printability, especially because of its low warping propensity. The layer thickness of 0.1 mm was set to meet the necessary dimensional requirements. This particular parameter was chosen with a purpose of achieving exact replication of 1 mm thread pitch of the M6 screw, thus ensuring geometrical accuracy of the printed thread elements.

The choice of a suitable layer thickness is important for precise thread formation in the case of 3D printing of fasteners using FDM technology. Using thicker layers may lead to the occurrence of staircase effect and dimensional inaccuracies along the crest and root of the thread. While the larger nominal thread pitch of 1.75 mm of the M12 fastener might allow for an increased layer height in relation to the M6 fastener (1.0 mm pitch), a constant layer height of 0.1 mm was used for both cases. This methodology will ensure uniform printing conditions, thus allowing for comparison of the effect of fastener dimensions on dimensions and strength characteristics. Due to lack of experimental comparison data available in literature, an hypothetical approach is suggested to evaluate the performance of FDM fabricated M6 and M12 bolts. For each bolt configuration, 50 samples will be used in the assessment. The key parameters that will be considered for the evaluation process are dimensional tolerance, stated in terms of % deviation in pitch diameter, and ultimate tensile load, given in Newton's (N).

As there is no existing empirical data to support the comparative analysis in the available literature, a hypothesis-driven framework has been designed to test the performance of the FDM 3D printed M6 and M12 fasteners. In accordance with the proposed framework, the number of specimens to be tested would be 50 for each fastener design. The key parameters to be considered for evaluation are: (i) dimensional error, represented in percentage terms in terms of pitch diameter and (ii) ultimate tensile load, expressed in Newtons (N) which is essentially the maximum axial load that can be supported before failure of the fastener due to thread stripping or shaft breakage occurs. As an example, in case of the M6 fasteners, the dimensional errors could reach up to 8% while in case of M12 fasteners; the dimensional errors are expected to be less than 3%. The tensile loads at failure for M6 and M12 fasteners are expected to be around 150 N and 1,200 N respectively. The projected values aim to highlight the possible effect of the fasteners dimensions and geometrical configuration on tensile performance. The need for further experimental verification exists.

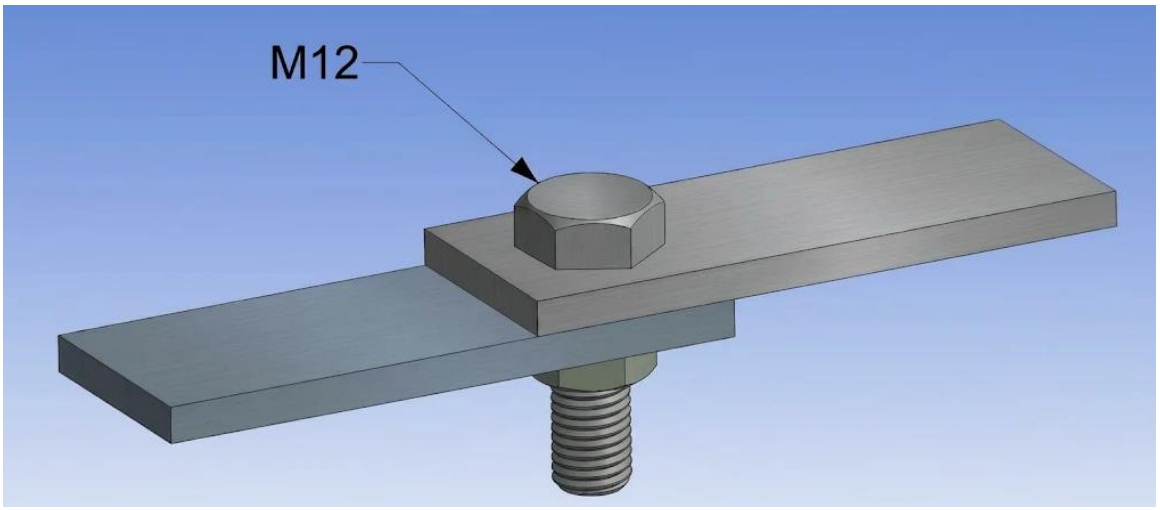

Figure 2: Assembly of Flat plate with M12 Bolt and Nut

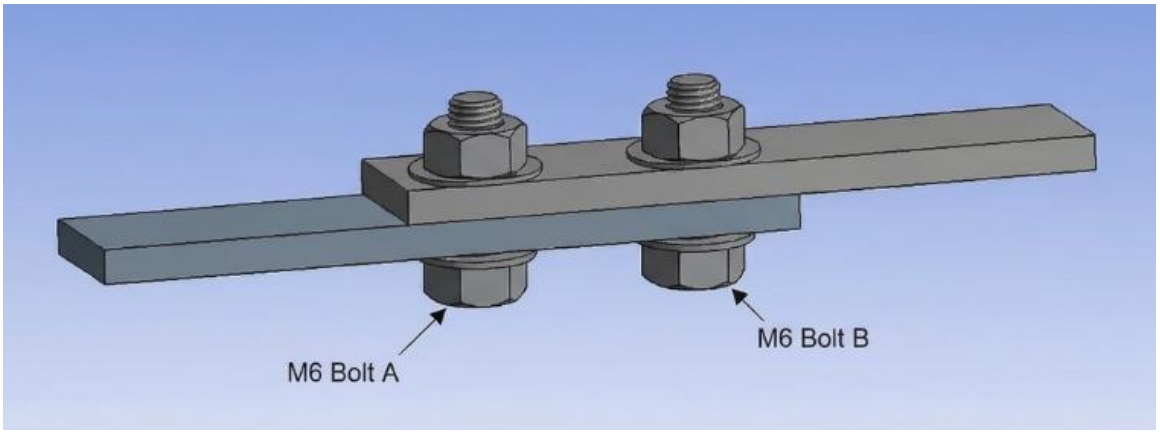

Figure 3: Assembly of Flat plate with M6 Bolt and Nut

Proposed Experimental Procedure

In order to achieve consistency of the methodology and to provide reproducibility of future experiments the following methodology is proposed:

1. CAD Modeling: Create standardized ISO compliant 3D CAD models of M6 and M12 bolts as well as matching nuts, including correct nominal dimensions and profile of threads.

2. Slicing Parameters: Set slicing parameters, such as layer height = 0.1 mm, infill percentage = 100% and nozzle diameter = 0.4 mm.

3. FDM Printing: Print bolts and nuts using FDM printing. The printing orientation should be specified in order to study its effect on interlayer adhesion and anisotropy.

4. Dimensional Characterization: Determine the dimensions such as pitch diameter, thread pitch, and thread angle using suitable instruments for dimensional characterization and optical microscopy. Compare the measured values to those of the CAD drawings to find the dimensional errors.

5. Tensile Testing: Perform tensile testing along the longitudinal axis until the specimen fails using a universal testing machine (UTM). Record the load supported by each specimen at failure and determine the major modes of failure like thread stripping and shaft breaking.

6. Analysis: The FEA process was performed using ANSYS simulation software for analysis and comparison of the structures of the additively manufactured M6 and M12 fasteners made out of acrylonitrile butadiene styrene (ABS) and polylactic acid (PLA). Three-dimensional CAD models of the bolts, their respective nuts, and workpiece were designed and imported into ANSYS for assembly of the fasteners under specific loadings and boundary conditions. The material properties were selected for the ABS and PLA models in order to investigate the effect of the properties and dimensions of the fasteners on structural performance. The computational modeling concentrated on investigating the total deformation, von Mises stress, and shear stress distribution along the bolt shank, threading sections, and interface contacts. Moreover, stress concentration areas and deformations of the M6 and M12 fasteners were investigated in order to identify the possible failure points. The corresponding ANSYS results, including bolt–nut assembly configurations, total deformation, equivalent stress, and shear stress distributions for the M6 and M12 fasteners, are presented in Figs. 4–9.

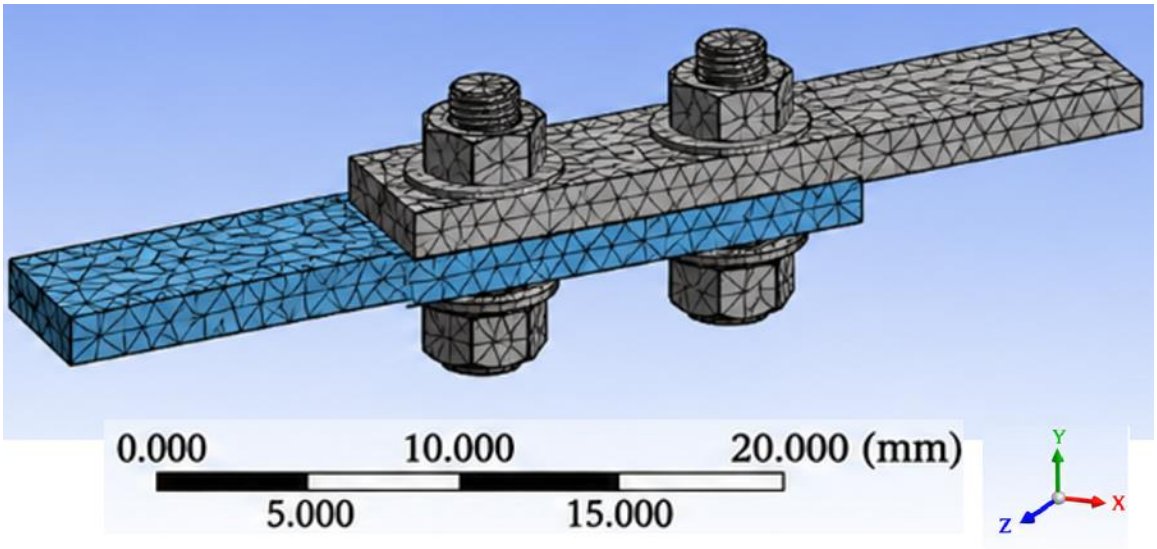

Figure 4: Mesh Structure of M6 Bolt and Nut

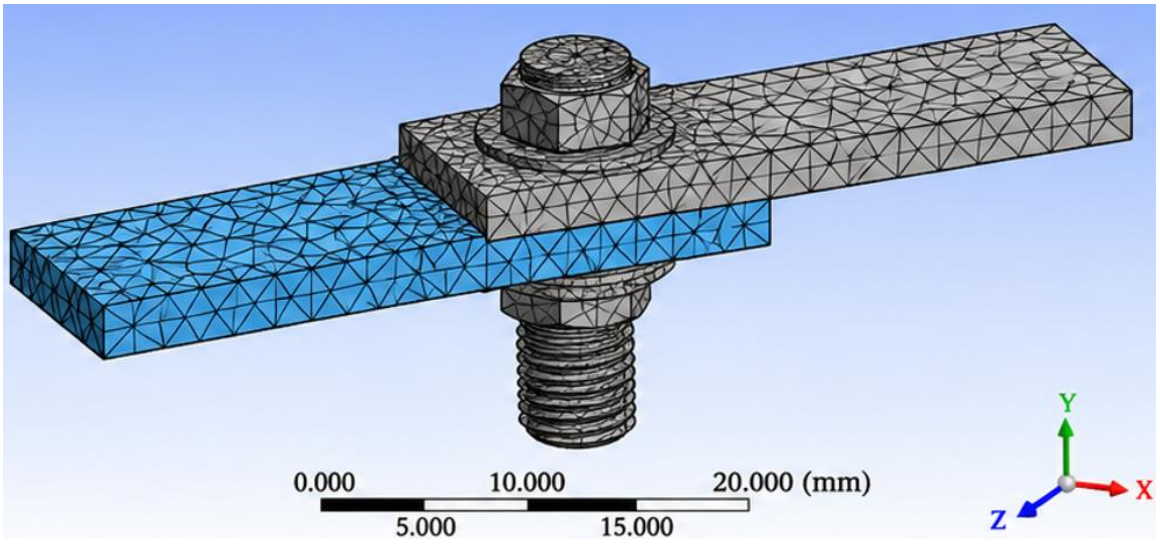

Figure 5: Mesh Structure of M12 Bolt and Nut

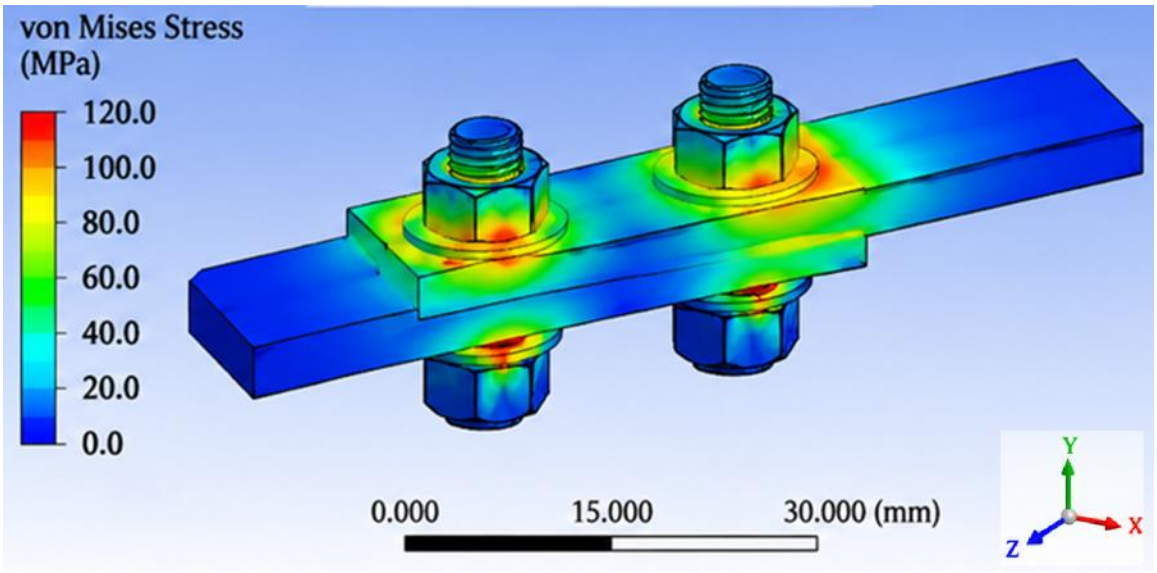

Figure 6: Stress Analysis of M6 Bolt and Nut

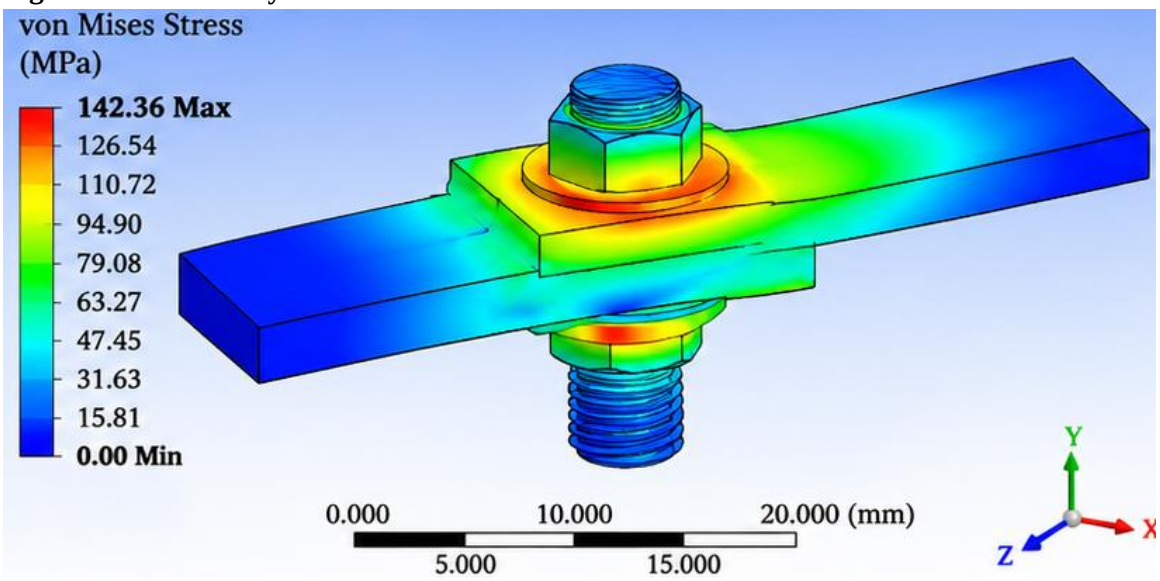

Figure 7: Stress Analysis of M12 Bolt and Nut

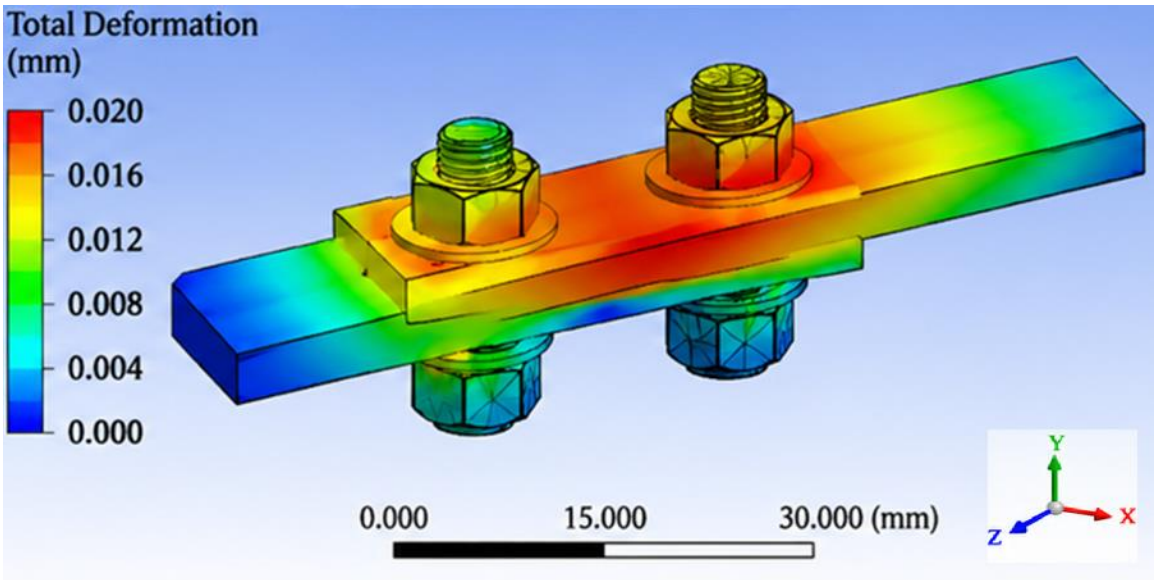

Figure 8: Deformation of M6 Bolt and Nut

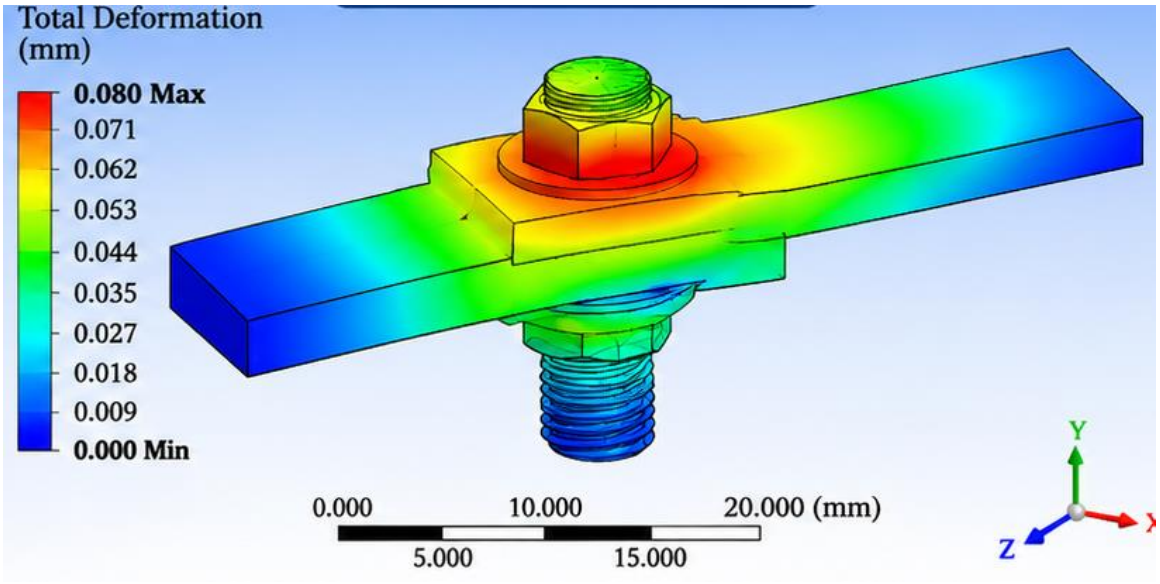

Figure 9: Deformation of M6 Bolt and Nut

The structural integrity of the fasteners made of ABS and PLA materials was analyzed using the ANSYS simulation tool. According to Table 7, the expected failure loads in the case of fasteners made of these materials would be 270 N for ABS bolts and 300 N for PLA bolts, which implies that there is an 11.11% improvement in the load-bearing capabilities of PLA. The expected shear stresses for these bolts were 3.69 MPa for ABS and 4.10 MPa for PLA; meanwhile, the von Mises stresses amounted to 3.60 MPa and 3.87 MPa, respectively. This means that there is comparatively high expected failure load for PLA under the given simulation settings. It is worth noting that FDM-produced fasteners are vulnerable to such problems as delamination, stripping, and dimensional inaccuracy, especially in small M6-size variants due to insufficient extrusion width and thread resolution. In addition, there might be variations in the geometry of threads depending on printing temperatures and cooling rates. From the industry point of view, the potential benefits of on-demand production include remote production, marine operations, and disaster relief operations through decreased dependence on conventional spare-parts inventory (Nyman & Sarlin, 2013). However, polymer fasteners should be used in low-load applications only initially.

Further studies can focus on improving the accuracy and mechanical properties of M6 and M12 fasteners using other AM techniques and numerical modeling methods. SLA could provide higher resolution when producing fine threaded parts, although the mechanical properties of photopolymer materials need to be examined further. In addition, the inclusion of geometrical parameters such as threads, printing direction, infill percentage, and material properties into the prediction model could be used in conjunction with FEA to determine stress values and load-to-failure point. The experiments can also include measurement of dimensions and tensile tests to derive the correlation between manufacturing parameters and performance.

Conclusion

The current research describes a methodology to assess the feasibility and structural properties of printed M6 and M12 threaded bolts by performing dimensional analysis, mechanical testing and ANSYS-based finite element analysis. Comparative analysis allows one to reveal the effect of thread shape, selected material and printing resolution on the dimensional accuracy and mechanical behavior of printed fasteners. Numerical simulation shows that the PLA bolt produces higher load to the point of predicted failure (300 N) in comparison with the ABS bolt (270 N), indicating the comparatively better structural performance of the former fastener under the specified simulation conditions. The larger thread pitch in the case of M12 fastener can be seen as a potential advantage in terms of dimensional accuracy in comparison with the M6 fastener, which appears to be more sensitive to extrusion width and geometric requirements. However, both fastener designs are limited by

the inter-layer bonding, dimensional inaccuracies and inherent anisotropy of the mechanical behavior of the FDM-printed products. Although printing polymer fasteners in demand is associated with the possibility of decentralized production and improved supply chain management, the application of printed fasteners should currently be limited to non-critical, low-load assemblies due to lack of experimental validation. Future research should focus on applying high-resolution additive manufacturing methods, improving the properties of polymer materials, and developing predictive numerical models in order to improve dimensional accuracy and mechanical properties.

References

1. Nyman, Henrik J, & Sarlin, Peter (2013). *From Bits to Atoms: 3D Printing in the Context of Supply Chain Strategies*. HICSS 2014: 4190-4199. https://arxiv.org/pdf/1306.4512v1 https://arxiv.org/pdf/1306.4512v1
2. Hong, Sangmin, Jung, Daniel Sungho, Kim, Heewon, & Lee, Kyoung Mu (2026). *PrintAnything: Learning an Intermediate Representation for 3D printing G-code Generation*. https://arxiv.org/pdf/2607.27729v1 https://arxiv.org/pdf/2607.27729v1
3. Alzain, Razan Abdelazim Idris (2022). *Large-Scale 3D Printing -- Market Analysis*. https://arxiv.org/pdf/2301.00680v1 https://arxiv.org/pdf/2301.00680v1
4. Zhou, Qingnan, & Jacobson, Alec (2016). *Thingi10K: A Dataset of 10,000 3D-Printing Models*. https://arxiv.org/pdf/1605.04797v2 https://arxiv.org/pdf/1605.04797v2
5. Ikei, Alec, Wissman, James, Yesner, Gregory, & Rohde, Charles (2021). *3D Printed PVDF*. https://arxiv.org/pdf/2102.13084v1 https://arxiv.org/pdf/2102.13084v1
6. Tushar, Nahid, Wu, Rencheng, She, Yu, Zhou, Wenchao, & Shou, Wan (2024). *Robot Tape Manipulation for 3D Printing*. https://arxiv.org/pdf/2401.08982v1 https://arxiv.org/pdf/2401.08982v1
7. Nettekoven, Alexander, & Topcu, Ufuk (2021). *A 3D Printing Hexacopter: Design and Demonstration*. https://doi.org/10.1109/ICUAS51884.2021.9476759 https://doi.org/10.1109/ICUAS51884.2021.9476759.
8. Gao, W., Zhang, Y., Ramanujan, D., Ramani, K., Chen, Y., Williams, C. B., Wang, C. C. L., Shin, Y. C., Zhang, S., & Zavattieri, P. D. (2015). The status, challenges, and future of additive manufacturing in engineering. Computer-Aided Design, 69, 65–89. https://doi.org/10.1016/j.cad.2015.04.001
9. Gibson, I., Rosen, D. W., & Stucker, B. (2015). Additive Manufacturing Technologies: 3D Printing, Rapid Prototyping, and Direct Digital Manufacturing (2nd ed.). Springer.
10. Nyman, H. J., & Sarlin, P. (2014). From bits to atoms: 3D printing in the context of supply chain strategies. Proceedings of the 47th Hawaii International Conference on System Sciences. https://doi.org/10.1109/HICSS.2014.518
11. Turner, B. N., Strong, R., & Gold, S. A. (2014). A review of melt extrusion additive manufacturing processes: I. Process design and modeling. Rapid Prototyping Journal, 20(3), 192–204. https://doi.org/10.1108/RPJ-01-2013-0012
12. Popescu, D., Zapciu, A., Amza, C., Baciu, F., & Marinescu, R. (2018). FDM process parameters influence over the mechanical properties of polymer specimens: A review. Polymer Testing, 69, 157–166. https://doi.org/10.1016/j.polymertesting.2018.05.020
13. Tronvoll, S. A., Elverum, C. W., & Welo, T. (2018). Dimensional accuracy of threads manufactured by fused deposition modeling. Procedia Manufacturing, 26, 763–773. https://doi.org/10.1016/j.promfg.2018.07.088
14. Chand, R., Sharma, V. S., Trehan, R., & Gupta, M. K. (2022). A physical investigation of dimensional and mechanical characteristics of 3D printed nut and bolt for industrial applications. Rapid Prototyping Journal, 28(5), 953–966. https://doi.org/10.1108/RPJ-09-2021-0250
15. Sarzyński, M., Chudzik, K., Panek, P., Sarzyński, B., & Zaborniak, M. (2024). Analysis of geometrical accuracy and surface quality of threaded and spline connections manufactured using MEX, MJ and VAT additive technologies. Materials, 17(21), 5143. https://doi.org/10.3390/ma17215143

16. Syrlybayev, D., Zharylkassyn, B., Seisekulova, A., Akhmetov, M., Perveen, A., & Talamona, D. (2021). Optimisation of strength properties of FDM printed parts—A critical review. Polymers, 13(10), 1587. https://doi.org/10.3390/polym13101587
17. Cojocaru, V., Frunzaverde, D., Miclosina, C. O., & Marginean, G. (2022). The influence of the process parameters on the mechanical properties of PLA specimens produced by fused filament fabrication—A review. Polymers, 14(5), 886. https://doi.org/10.3390/polym14050886
18. Medibew, T. M. (2022). A comprehensive review on the optimization of the fused deposition modeling process parameter for better tensile strength of PLA-printed parts. Advances in Materials Science and Engineering, 2022, 5490831. https://doi.org/10.1155/2022/5490831
19. Algarni, M. (2021). The influence of raster angle and moisture content on the mechanical properties of PLA parts produced by fused deposition modeling. Polymers, 13(2), 237. https://doi.org/10.3390/polym13020237
20. Tan, M. A., Yeoh, C. K., Teh, P. L., Rahim, N. A., Song, C. C., & Mansor, N. S. S. (2021). Effect of infill density and raster angle on the mechanical properties of PLA. Journal of Physics: Conference Series, 2080, 012002. https://doi.org/10.1088/1742-6596/2080/1/012002
21. Chansamai, P., Seangpong, T., & Uthaisangsuk, V. (2023). Effect of raster and layer characteristics on tensile behavior and failure of FFF printed PLA samples by representative volume element model. Proceedings of the Institution of Mechanical Engineers, Part E: Journal of Process Mechanical Engineering. https://doi.org/10.1177/09544054231202210
22. Gajjar, T., Yang, R., Ye, L., et al. (2025). Effects of key process parameters on tensile properties and interlayer bonding behavior of 3D printed PLA using fused filament fabrication. Progress in Additive Manufacturing, 10, 1261–1280. https://doi.org/10.1007/s40964-024-00704-y
23. Jayakumar, N., Senthilkumar, G., & Kumar, M. (2026). Investigation on geometric, dimensional accuracy and surface roughness for 3D printed PLA via fused deposition modelling (FDM) process. Proceedings of the Institution of Mechanical Engineers, Part E: Journal of Process Mechanical Engineering, 240(1), 1019–1030. https://doi.org/10.1177/09544089241312637
24. Miwa, V. H. S., do Prado, T. M., Viana, R., da Cunha, J. B., & da Cunha, D. F. (2026). Mechanical and dimensional assessment of threaded fasteners manufactured using 3D printing. Procedia Computer Science, 277, 2891–2900. https://doi.org/10.1016/j.procs.2026.02.325
25. Hong, S., Jung, D. S., Kim, H., & Lee, K. M. (2026). PrintAnything: Learning an intermediate representation for 3D printing G-code generation. arXiv preprint, arXiv:2607.27729.

    https://doi.org/10.48550/arXiv.2607.27729
26. Jayakumar, N., et al. (2020). Experimental study of surface roughness, dimensional accuracy and time of fabrication of parts produced by fused deposition modelling. Rapid Prototyping Journal, 26(9), 1535–1554. https://doi.org/10.1108/RPJ-12-2019-0315
27. Mahmood, S., Qureshi, A. J., Goh, K. L., & Talamona, D. (2017). Tensile strength of partially filled FFF printed parts: Experimental results. Rapid Prototyping Journal, 23, 122–128.

    https://doi.org/10.1108/RPJ-08-2015-0115

Copyright & License:

© Authors retain the copyright of this article. This work is published under the Creative Commons Attribution 4.0 International License (CC BY 4.0), permitting unrestricted use, distribution, and reproduction in any medium, provided the original work is properly cited.