IJNRD.ORG ISSN : 2456-4184
INTERNATIONAL JOURNAL OF NOVEL RESEARCH AND DEVELOPMENT (IJNRD) | IJNRD.ORG
An International Open Access, Peer-reviewed, Refereed Journal

Smart Home Security System Using IOT

NIVESHAA .R[1A], AVANTIKA .V[1B], HARRIAT LINDA .L[1C], BHAVANI.G. [2*]
[1]Department of Information Technology,Panimalar Engineering College,Chennai, India
[2]Assistant Professor, Department of Information Technology, Panimalar Engineering College,Chennai, India
[A]nivesharamesh108@gmail.com, [B]avantikav0705@gmail.com, [C]harriatlinda10@gmail.com. *bhavanigovar@gmail.com

Abstract: IoT refers to the infrastructure of connected physical devices that is growing rapidly as many devices and objects are connected to the Internet. Home security is a very useful application of the IoT and we use it to create cost-effective security. The Internet of Things (IoT) will be used to make the house smarter, safer, and more automated. This primarily focuses on developing a smart wireless home security system that provides alerts to the owner via the internet in the event of any trespassing and, if desired, sets an alarm. This will also be utilised to automate the home through the use of sensors. Every instrument has a different way of working. As a result, we prefer to propose a system that will transform the home through the deployment of a Cloud intelligent Tetris switch and other IoT-based equipment. Tetris switch is used to exchange information and manage power. For maximum performance, a dynamic long module is also included.From the Cloud Home as a Service (HaaS) server, the interface for shopper users, storage, and queries will be removed. These servers are webbased remote servers that help you manage and process data without the need for specific computers. Multiple sensors will be installed at the needed place, and the net-based servers will be structured to control and monitor them.

Keywords : Smart Home Security System, IOT, Actuators, Cloud, Sensors

I-INTRODUCTION

Thecurrent state of all home appliances can be checked remotely even when they are all connected to the internet and demand has already been determined on a central server. However, not all of the appliances are capable of being connected to the internet. The mechanical switch is used to operate the majority of the equipment. The arduous difficulty is connecting diverse equipment with varying functional qualities. The extension cord with manual switches is the most typical solution to this problem. There are two phases for controlling devices: i) extension power cable switch for power supply, and ii) switch for function activation of appliances' correct network connection can also be used for monitoring and managing home appliances. When the appliances are not in use, they should be turned off.

The functioning parameters for one appliance cannot be used for the other. The appliances do not automatically respond or respond to the central home server. The central home server is unable to recognise each home appliance and perform the function. As a result, distinguishing between various appliances is a time-consuming operation. The internet of things (IoT) platform is used to link all items to the internet. All equipment is now connected to the internet via the Internet of Things (IoT) method. The controller receives data from all powered devices, which are considered as network devices. Each device will be automatically identified by the control server. However, such devices do not exist

II-LITERATURE SURVEY

The term "home automation system" refers to a system that allows people to control their homes.

1. **Bluetooth based home automation**

The electric appliances are managed and controlled by a Bluetooth-based home automation system. When it comes to cell phones, different home automation systems have evolved throughout time. The home in a Bluetooth-based home automation system has always sought to provide efficient, convenient, and safe appliances that are connected to the Arduino BT board at input ways for residents to enter their homes. output ports controlled by a relay The Arduino BT programme Regardless of the user's expectations, the expanding board is based on high-level interactive C language technology, or the appearance of home microcontrollers through time; the connection is made via Bluetooth. The automation system has not changed. Only authorised users are permitted access to the appliances, which is protected by a password.

2. **Zigbee based home automation system usingBluetooth, Wi-Fi and IOT based home automationcell phones:**

. The advancement of wireless technologies has resulted in a significant increase in the number of people Wi-Fi, cloud networks, and wireless designed and implemented using Zigbee have all been used to monitor and manage household appliances in the past. Every day and everywhere, device systems are used. Network coordinators keep track of and store performance.This is accomplished through the use of a Wi-Fi network, which employs a four-port standard wireless ADSL contemporary router. The network SSID and Wi-Fi security parameter are already set. The message is initially processed by the virtual house algorithm for security purposes, and once it is declared secure, it is re-encrypted and forwarded to the home's real network device. The Zigbee controller relayed messages to the end over the Zigbee network.

3. GSM based home automation system using cell phones:

GSM-based home automation is attracting investigation because of mobile phones and GSM technology. We evaluated SMS-based home automation, GPRS-based home automation, and dual tone multi frequency (DTMF)-based home automation primarily for GSM communication.

Figure 1 presents a logical model of A. Alheraish's work, which depicts how home sensors and devices interact with the home network and communicate via GSM and SIM cards (subscriber identity module). The system makes use of a transducer, which converts machine functions into electrical signals that are then sent to the microcontroller. The system's sensors translate physical properties such as sound, temperature, and humidity into a different quantity, such as voltage. All signals are analysed by the microcontroller and converted into commands that GSM can interpret.All signals are analysed by the microcontroller and converted into commands that the GSM module can interpret. Based on the command received by the GSM module, choose a suitable communication method from SMS, GPRS, or DTFC.

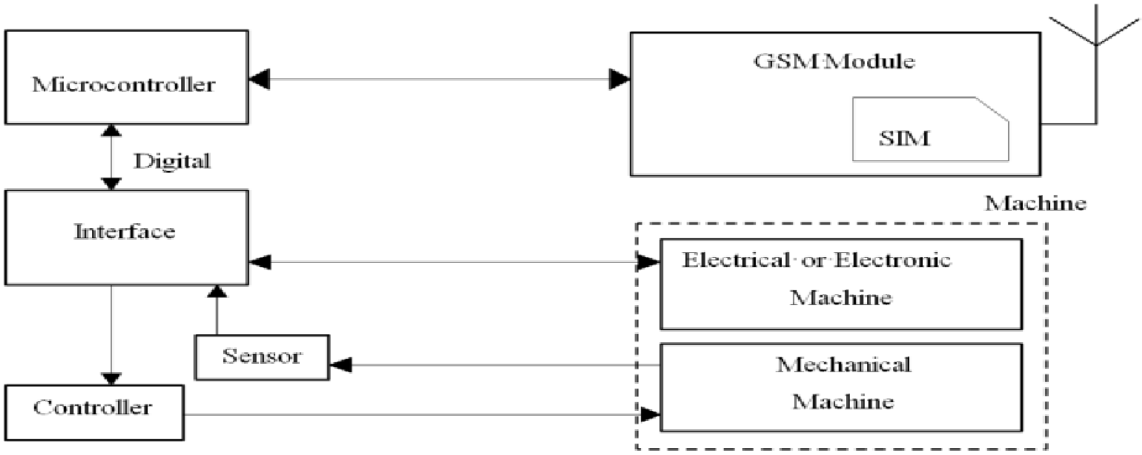

Figure 1: A logical model of a Alheraish's work

4. Raspberry pie home automation with wireless device:

The sensors are based on the Home Automation System, which was designed with ATmega2560 and a smart phone microcontroller board (Arduino ADK). It has a USB host connection to associate Raspberry Pi with Android-based phones by reading the algorithm and subject, and it is based on the mail. MAX3421e IC guarantees that Raspberry Pi will be an efficient platform. The following are the two most crucial characteristics of Android for implementing the powerful and cost-effective smart home Open Accessory Protocol 2.0 (AOAP): automation. In numerous aspects, Raspberry Pi home automation is superior to conventional home automation solutions.It has audio output from the Android device to the component that uses DTMF (dual tone multi-frequency) for example, and it also supports the component that serves as home automation. However, the call tariff is a major flaw, which is one or more Human Interface Devices (HID) to the not the problem in their proposed method. Android device at home. This paper is based on Android and web server automation, as well as the design of the web server Arduino platform, all of which are open source (Free Open and the memory space required is dismiss by this method, Source Software). Because it only uses the already established web server technologies, motion sensors are included for safety.

5. Cloud Based home automation system:

The goal of employing a cloud-based system for home automation is to focus on The script, which runs on the server side of our laptop or on a web design and implementation of home gateway to collect server accepts input commands from the user and data about data from home appliances, and then provides it to the client as appropriate (Raspberry Pi). We will utilise those input commands to turn a light File System in this cloud-based data server to get stored on Hadoop Distributed. It is processed using MapReduce and used to ON/OFF. Implement a monitoring task to Remote user when we issue the command to turn on a light. Currently, the data and information is relayed by the server side script, and the Home Automation System is persistently developing its relayed.The purpose of using a cloud-based system for home automation is to concentrate on the important things. The script, which runs on the server side of our laptop or on a site design and implementation of home gateway to gather data, accepts user actions and data from home appliances, and then sends it to the client as needed (Raspberry Pi). We'll use those instructions to convert a light File System in this cloud-based data server to Hadoop Distributed storage. It is used to ON/OFF and is processed using MapReduce. When we provide a remote user the instruction to switch on a light, create a monitoring task for them.

III-COMPARISION

Serial no.	System	Communication Interface	Controller	User Interface	Applications	Merits
1	Wi-Fi based using Arduino microcontroller through IOT	Wi-Fi	Arduino	Web Application and android App	Temperatu re and motion detection, monitoring and controlling appliances	Low cost, Secure, Remotely controlled
2	Smart Task Scheduling Based using Arduino and Android	Wired X10 and Wireless Zig bee	Arduino	Android Application	Energy Management and task scheduling with power and cost	Energyefficient and Highly scalable
3	Web service and android app Based using Raspberry pi	Web server and interface card	Raspbery pi	Android application	Controlling shutter of window	Autonomous, and Quite scalable
4	Cloud Based Using Hadoop System	Cloud based data server uses Hadoop technology	Home gateway and router	Smart device	Monitoring and Controlling Home Appliances	Effectively manage Semi structured and unstructured data, Reduce computationa l burden of smart devices
5	Cloud Based Using Zig Bee Microcontroller	Zig bee wireless Network	Smart Socket	PC or Android Phone	entrance control management, monitoring the power consumption, temperature and humidity	Convenience, safety, and Power saving
6	Wireless Sensors Based with mobile Technology	cloud-based data server	PCB circuits	Mobile Application	monitor the home nditions and power consumptio n of appliance	Low power consumption And system cost efficiency.

7	Android based using Arduino	Micro Web Server	Arduino Mega 2560 and the Arduino Ethernet shield	Android App	Light switches, Tempera ture, Humidity sensors, Intrusion detection, Smoke/Gas sensor	Feasibility and Effectiveness
8	Konnex- Bus based using raspberry pi	SIP Provider	Raspberry pi and Konnex Bus	Mobile App	Lights Control, Temperature Monitoring	Performance improved, energy consumption could be Reduced.
9	Bluetooth Based using Arduino	Bluetooth	Arduino	Python supported mobile	controlling	Secured and Low cost
10	GSM Based Using Arduino	SMS	Arduino	Smartphon e App	Control appliances	Simplicity

IV- PROPOSED METHOD

We propose a system that incorporates a Cloud Intelligent Tetris Switch, a Cloud Home as a Service (HaaS) Server, and IOT-based Appliances to address the challenges of connecting data to the internet.

IOT ARCHITECTURE :

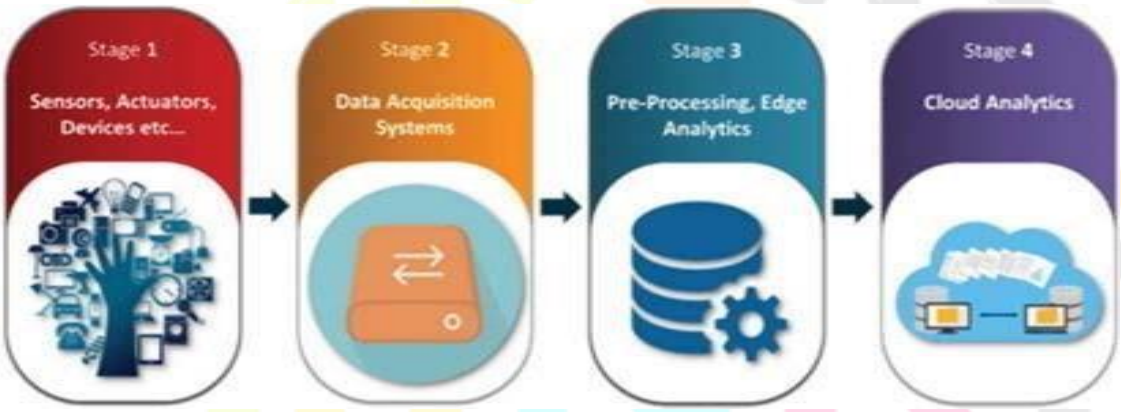

Figure 2: IOT Architecture

Stage 1 (Sensors/Actuators)
In order to disseminate, recognise, and technically process the signal, everything associated to the "web of things" should be fitted with sensors and actuators in accordance with these principles.
Stage 2 (Data Acquisition Systems)
The sensor's data starts with a rudimentary structure that must be collected and turned into a modern stream for processing. The data validation structure re-creates a mix of this data and modifies the bounds.
Stage 3 (Edge Analytics)
Before accessing the server lunch, further caution may be required if IoT data is digitised and collected. This is where you'll find Edge Analytics.
Stage 4(Cloud Analytics)
Data that has to be processed is increasingly being transmitted to physical server farms or cloud based systems.

IOT based Appliance :
Homeappliances are frequently identified on a per-item basis by utilising an extra socket structure with an RFID reader or scanner. In other words, similar to EPCIS and EPC networks, the remote home server will query the corresponding device description information from the web and manufacture, based on the obtained identification data of the house appliance. Then, in today's world, even household appliances are frequently managed in accordance with their functions.

Server for Cloud Home as a Service (HaaS) The server will obtain the corresponding operate data of individual appliances via the electrical product code, similar to the EPCIS and EPC networks. Furthermore, because the HaaS server might impact the administration of specific appliances, a freelancing server for each home will be necessary.

Furthermore, each Cloud Home as a Service (HaaS) VM's database can register IoT-based smart home equipment and the cloud intelligent tetris switch. As a result, even identical home equipment in various residences may be identified based on their registration in a Cloud Home as a Service (HaaS) VM's particular database. As a result, each user can only control the home appliances that are registered in the Cloud Home as a Service (HaaS) VM for that user. It is possible to maintain security.

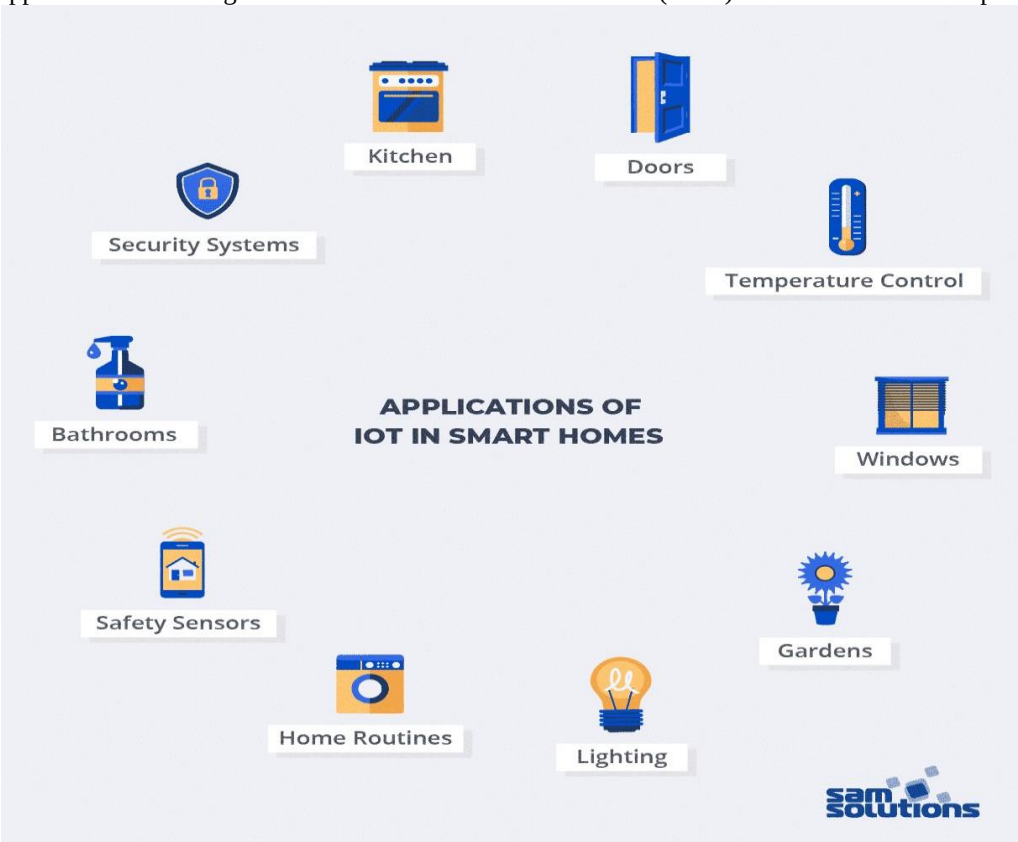

Figure 3: Applications of smart home

V. IMPLEMENTATION

The cloud intelligent Tetris switch can dynamically control this, as well as manage and turn on/off the appliances.The smart home programme maintains the house database in the cloud, allowing remote users to access it and acquire the most up-to-date information on the home's state. Device security and authentication, message brokers and message queuing, device management, protocols, data collecting, visualisation, and analysis are all included in a typical IoT platform.APIs provide real-time data, scalability, and integration with other online servicesOpen source libraries and information flow The Internet of Things (IoT) sensors for home automation areTemperature, lux, water level, and air pressure are examples of sensor capabilities.Composition, surveillance video cameras, voice/sound, pressure, humidity, accelerometers, infrared, vibrations, and ultrasonic are some of the technologies used. The following are a few of the most regularly used terms.The majority of smart home sensors are digital sensors, however some are analogue.It is analogue and can be quite precise. The luminance is measured via lux sensors.

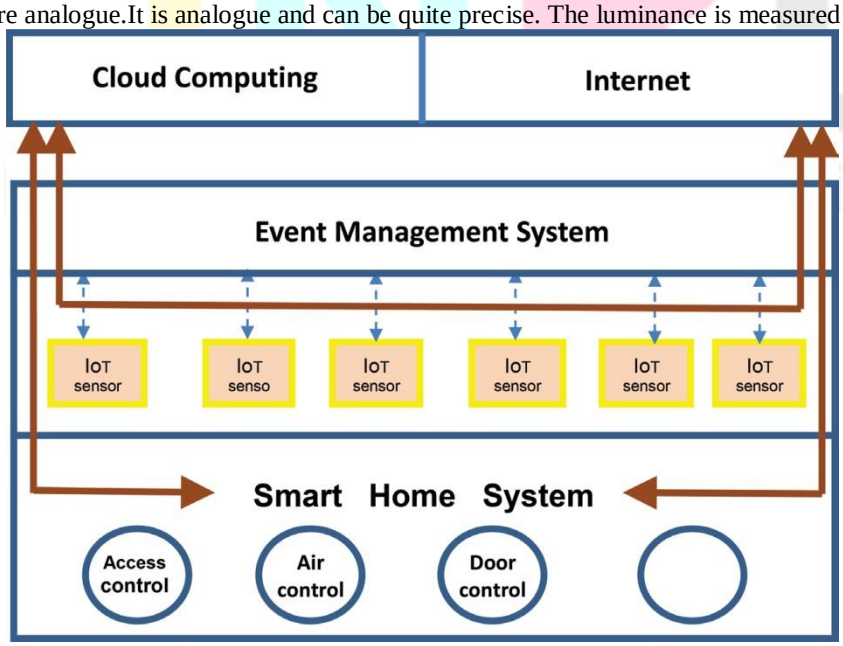

Figure 4 : Implentation of smart home system

a. Circuit diagram:

The diagram depicts the proposed system's overall structure. The sensors, switches, and other modules are all connected, and it may be utilised to automate home appliances from afar or by users.

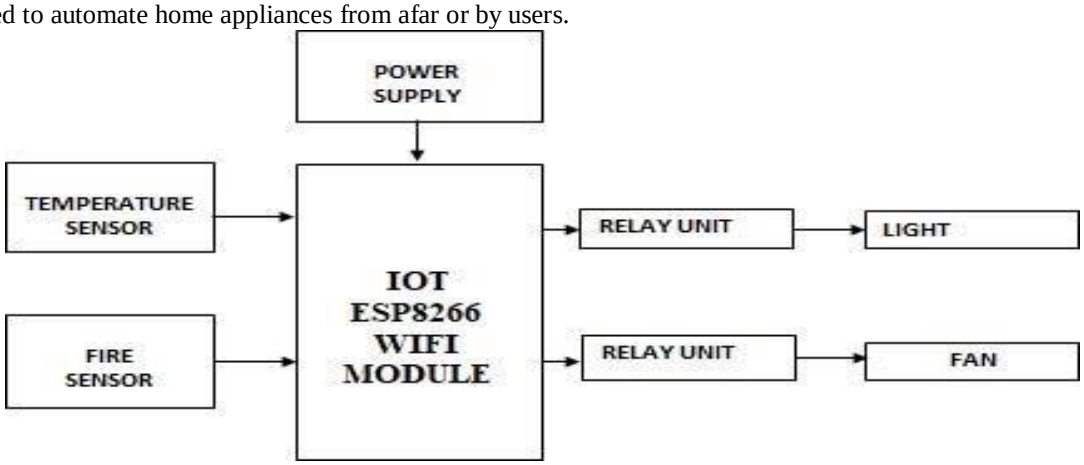

Figure 5 : Circuit Diagram

VI-CONCLUSION

A review of several home security systems reveals that numerous technologies are used to construct this type of system. In this study, all of the proposed systems have been presented and contrasted, revealing some of the systems' advantages and disadvantages. Web-based, Bluetooth-based, mobilebased, SMS-based, ZigBee-based, Arduino microcontroller-based, Android app-based, IOT-based, and cloud-based home automation systems were discussed in this review. Because of its performance, simplicity, cheap cost, and dependability, home automation systems are gaining traction in the worldwide market, and the day when every home is a smart home is not far off.

REFERENCES

[1] Jayasinghe, G. M. Lee, T. Um and Q. Shi, "Machine Learning based Trust Computational Model for IoT Services", in IEEE Transactions on Sustainable Computing, May 2018.

[2] L. Xiao, X. Wan, X. Lu, Y. Zhang and D. Wu, "IoT Security Techniques Based on Machine Learning: How Do IoT Devices Use AI to Enhance Security?", in IEEE Signal Processing Magazine, vol. 35, no. 5, pp. 41– 49, Sept. 2018.

[3] Kim Baraka, Marc Ghobril, Sami Malek, RouwaidaKanj, AymanKayssi "Low cost Arduino/Android-based Energy-Efficient Home Automation System with Smart Task Scheduling", 2013 Fifth International Conference on Computational Intelligence, Communication Systems and Networks

[4] Cristian C, Ursache A, Popa D O and Florin Pop 2016 Energy efficiency and robustness for IoT: building a smart home security system *Faculty of Automatic Control and Computers*

[5] University Politehnica of Bucharest, Bucharest, Romania 43

Lee C T, Shen T C, Lee W D and Weng K W 2016 A novel electronic lock using optical Morse code based on the Internet of Things *Proceedings of the IEEE International Conference on*

Advanced Materials for Science and Engineering eds. Meen, Prior & Lam

Jan Gebhardt, Michael Massoth, Stefan Weber and TorstenWiens,

"Ubiquitous Smart Home Controlling Raspberry Embedded

System", UBICOMM: The Eighth International Conference on Mobile Ubiquitous Computing, Systems, Services and Technologies, 2014.

BakiKoyuncu, "PC Remote Control of Appliances by Using Telephone Lines", 1995, IEEE Transactions on Consumer Electronics,Vol. 41(1), pp. 201-209. [8]Greichen, J.J., "Value based home automation or today's market,"

IEEE Transactions on Consumer Electronics, vol. 38, no. 3, pp.34- 38, Aug. 1992

[9]Alheraish, "Design and Implementation of Home Automation

System," IEEE Transactions on Consumer Electronics, vol. 50, no. 4, pp.1087-1092, Nov. 2004.

[10] B.Buvaneswari and Dr.T. Kalpalatha Reddy, "ACPT- An Intelligent Methodology for Disease Diagnosis",Journal of Advanced Research in Dynamical and Control Systems,ISSN : 0974-5572,Vol.11,No.4,Pp.2187-2194,2019.

[11] Sumithra, M., Shruthi, S., Ram, S., Swathi, S., Deepika, T., "MRI image classification of brain tumor using deep neural network and deployment using web framework", Advances in Parallel Computing, 2021, 38, pp. 614–617.

[12] K. Sridharan , and Dr. M. Chitra "RSSE: A Paradigm for Proficient Information Retrieval using Semantic Web" , Life Science Journal 2013;10(7s), pp: 418-425

[13] Sharanyaa, S., S. Vijayalakshmi, M. Therasa, U. Kumaran, and R. Deepika. "DCNET: A Novel Implementation of Gastric Cancer Detection System through Deep Learning Convolution Networks." In 2022 International Conference on Advanced Computing Technologies and Applications (ICACTA), pp. 1-5. IEEE, 2022.